2-5
YEARS

BOOSTER G2

CONSTRUCTION MANUAL

Length	87 - 113 cm / 35 - 44 inch
Max weight	23 kg / 50 lbs
Time to build	3,5 hours

infento

World's first real constructible rides

WARNING - IMPORTANT NOTICE TO PARENTS

Before you start constructing and use our product, please carefully read the following safety warning and download our manual from our website. This safety warning and manual contains important information relating to your child's safety. It is your responsibility to review this information with your child and make sure they are fully aware of all the warnings before they start riding. Failure to follow instructions and safety precautions can result in serious injury or death.

You can find a digital copy of the manual at the following web address:
www.infentorides.com

PLEASE PRINT OUT THE MANUAL AND KEEP THE MANUAL AND THIS **SAFETY WARNING** IN A SAFE LOCATION FOR FUTURE REFERENCE.

SAFETY SECTION

WARNING! PARENTAL SUPERVISION AND APPROPRIATE USE

Like any moving product, rides made from Infento parts can be dangerous if due care and attention is not paid. To reduce the risk of serious injury: use only under close adult supervision. Parents must review the following warnings and instructions with each Infento ride that is being build. It is your responsibility to review this information and make sure that all riders understand all warnings, cautions, instructions and safety topics, and assure that young riders are able to safely and responsibly use this product. Infento recommends that you periodically review and reinforce the information in this manual with younger riders, and that you inspect and maintain your child's Infento rides to insure their safety.

WARNING! RIDING ON INFENTO RIDES CAN BE A DANGEROUS ACTIVITY

Riding on Infento rides can be a dangerous activity. Certain conditions may cause the equipment to fail without fault of the manufacturer. Rides made from Infento parts can and are intended to move, and it is therefore possible to lose control, fall off and/or get into dangerous situations that no amount of care, instruction or expertise can eliminate. If such things occur you can be seriously injured or die, even when using safety equipment and other precautions. Ride at your own risk and use common sense.

WARNING! NO LIABILITY FOR CONSTRUCTED RIDES THAT DIFFER FROM OUR MANUALS

The rides that you can find in our manuals have been tested by official independent testing agencies. We will not be responsible or liable, directly or indirectly, in any way for any loss or damage of any kind incurred as a result of your decision to build constructions or rides that differ from the official rides that we show in our manuals.

ASSEMBLY – SUBSECTION

WARNING! OUR KITS CONTAIN SMALL PARTS

This package contains small parts which, before assembly, present a choking hazard to children under the age of three. Care should be taken during unpacking and assembly to insure that all small parts and plastic bags are accounted for and kept out of the reach of children.

WARNING! TO AVOID SERIOUS INJURY:

1. Toys are to be assembled by an adult using Infento manuals.
2. All fasteners (bolts and nuts) should be fully tightened.
3. It is the responsibility of the adult who assembles this bicycle to properly install all parts included in the factory sealed shipping carton and to make the adjustments to the functional parts such as handle bar and seat and chain when necessary.

USE – SUBSECTION

WARNING! TO AVOID SERIOUS INJURY:

1. Continuous adult supervision is required.
2. Only ride constructed rides that have been built according to the instructions given in the official Infento manual.
3. Never exceed the maximum weight. You can find the maximum weight for every specific ride in our manual.
4. Always check the manual to see the minimum and maximum age as well as the minimum and maximum length for every specific ride.
5. Always wear safety equipment such as a helmet, knee pads and elbow pads. We recommend riders always wear a properly fitted helmet that complies with local or national guidelines or laws. Keep chinstrap of helmet securely buckled.
6. Always wear closed toed shoes (lace-up shoes with rubber soles), never ride barefooted or in sandals, and keep shoe laces tied and out of the way of the wheels.
7. Avoid streets and surfaces with water, sand, gravel, dirt, leaves, and other debris. Wet weather impairs traction, braking and visibility.
8. Excessive exposure to sunlight, temperatures below 0 degrees Celsius, water, sand, gravel, dirt, leaves, and other debris can damage, shrink, expand or weaken parts. Keep your ride in a dry environment with proper heating.
9. Avoid sharp bumps, drainage grates and sudden surface changes. Your Infento ride may suddenly stop.
10. Ride on smooth, paved surfaces away from motor vehicles. Wet, slick or uneven and rough surfaces may impair traction and contribute to possible accidents.
11. Never risk damaging surfaces, such as carpet or flooring, by use of an Infento ride indoors.
12. Never use near motor vehicles, streets, roadways, alleys, swimming pool areas, hills, steps, sloped driveways, inclines and public highways.
13. Watch out for pedestrians, skaters, skateboards, scooters, bikes, children or animals who may enter your path, and respect the rights and property of others.
14. Avoid excessive speed associated with downhill rides.
15. Do not use at night or in periods with reduced visibility.
16. Before every use, please make sure that the complete ride and all joints have been assembled tightly, as with use, joints may wear out.
17. Before using your Infento ride, please check that the screws are tightened securely.
18. It's your own responsibility if you modify the product other than manufacturer's instructions.
19. Maintain a hold on the handlebars at all times.
20. Brake will get hot from continuous use. Do not touch after braking.
21. Periodically check hardware and tighten if necessary. Replace worn or broken parts immediately.
22. Skill is required to avoid falls or collision causing injury to the user and third parties.
23. Check operation of breaks every time before bicycle is ridden.
24. Check local laws before you start with riding.
25. Never tow wagons, other vehicles, or children on skates or skateboards.
26. Make certain that anyone who uses an Infento ride has been fully instructed in its operation.
27. Instruct your child on how to use the breaks.
28. Do not perform stunts.
29. Never use headphones or a cell phone when riding.
30. Only one rider at a time on an Infento ride.
31. Do not allow children to stand on the product at any time.

FAILURE TO USE COMMON SENSE AND HEED THE ABOVE WARNINGS INCREASES RISK OF SERIOUS INJURY. USE WITH APPROPRIATE CAUTION AND SERIOUS ATTENTION TO SAFE OPERATION.

SAFETY SECTION

OUR KITS CONTAIN SMALL PARTS

This package contains small parts which, before assembly, present a choking hazard to children under the age of three. Care should be taken during unpacking and assembly to insure that all small parts and plastic bags are accounted for and kept out of the reach of children.

QUESTIONS? HELP NEEDED?

You can email us at:
support@infentorides.com
and our team will assist you as soon as possible.

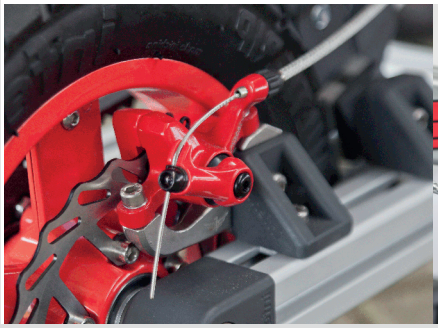

MAINTENANCE | INSTRUCTION

1. Oil or grease moving parts periodically.
2. Check nuts and bolts often and tighten if necessary.
3. Any parts showing evidence or wear should be replaced immediately.
4. Follow closely the assembly instructions pertaining to the proper adjustments of parts
5. Periodically check the brake system for proper function
6. Periodically check the steering mechanism for proper function
7. Check the air pressure in the tires to be the amount specified in the manual
8. Periodically check the bicycle's tooth belt to be sure that it is not too lose which could allow the chain to slip off the sprockets.

RECOMMENDED TOOLS

4 x Allen key
3, 4, 5, 6 mm

1 x Tapeline

1 x T-handle
for Allen key

5 x Wrench
10, 13, 14, 15, 19 mm

1

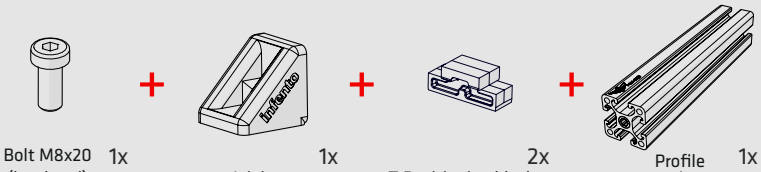

Bolt M8x20 (low head) 1x

L-joint 1x

T-Positioning block 2x

Profile 14.17 inch | 360 mm 1x

First, get all required materials stated here and then follow the instructions.

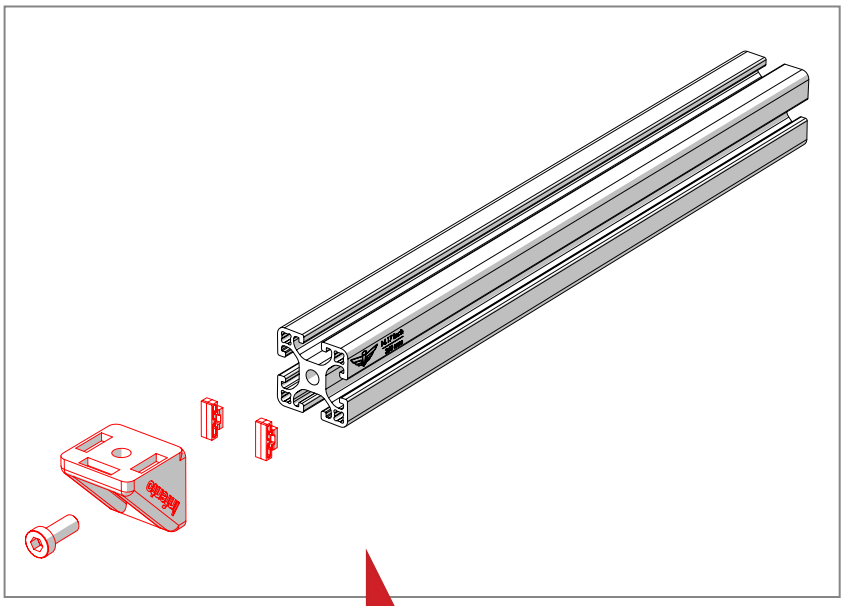

Tighten the bolts with full force. Ensure that you hold the long side of the Allen key in your hand as this enables you to exert greater force.

Double check here:
Does your result looks exactly like the image at the bottom of the page?

TOP 3 REQUIREMENTS MAKING A GREAT INFENTO EXPERIENCE:

1

Tighten bolts with full force (15Nm) to prevent them from coming loose.

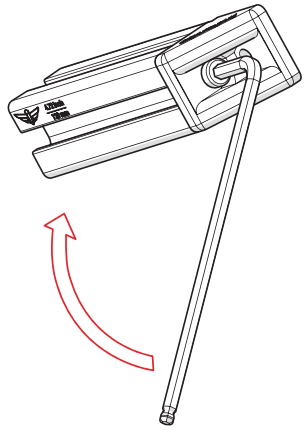

2

Constructing and playing always under supervision of an adult.

3

Check frequently if all parts are still firmly tightened and function properly.

2

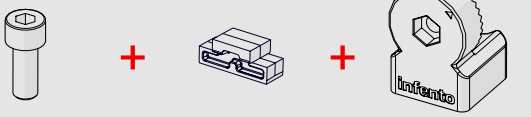

1x Bolt M8x20

2x T-Positioning block

1x Multi angle joint

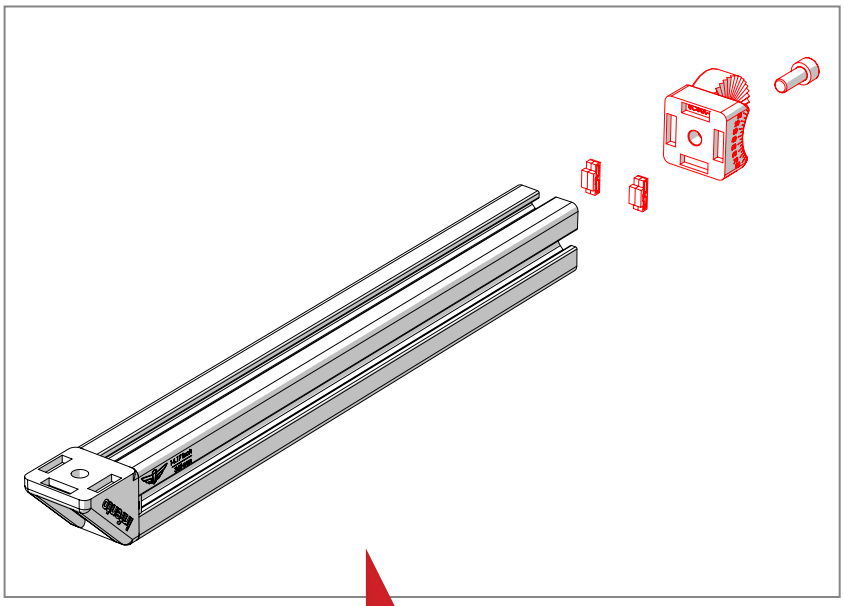

Tighten the bolts with full force. Ensure that you hold the long side of the Allen key in your hand as this enables you to exert greater force.

Double check here:
Does your result looks exactly like the image at the bottom of the page?

3

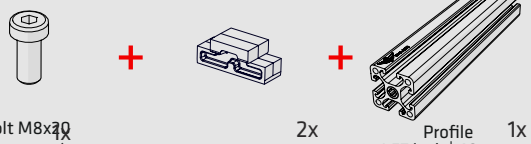

Bolt M8x30 (low head) 1x

2x T-Positioning block

Profile 1.57 inch | 40 mm 1x

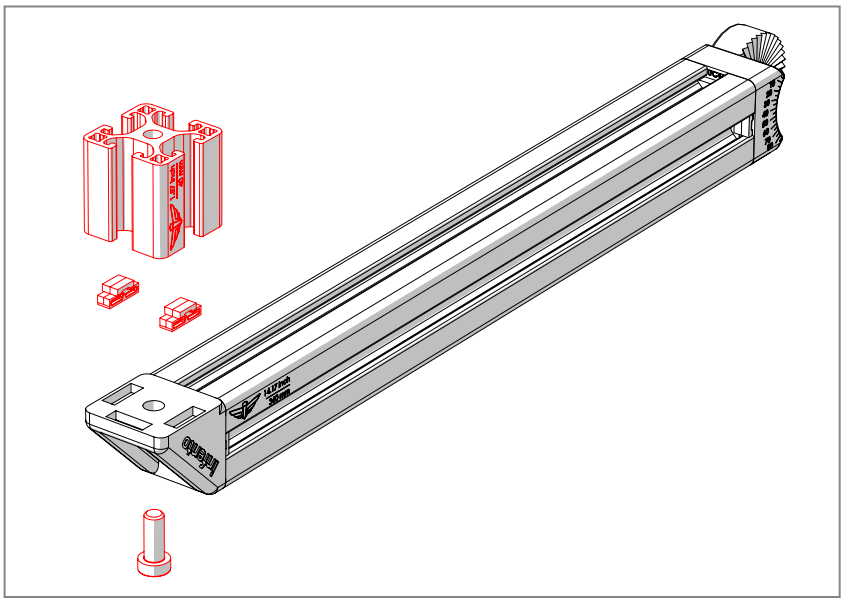

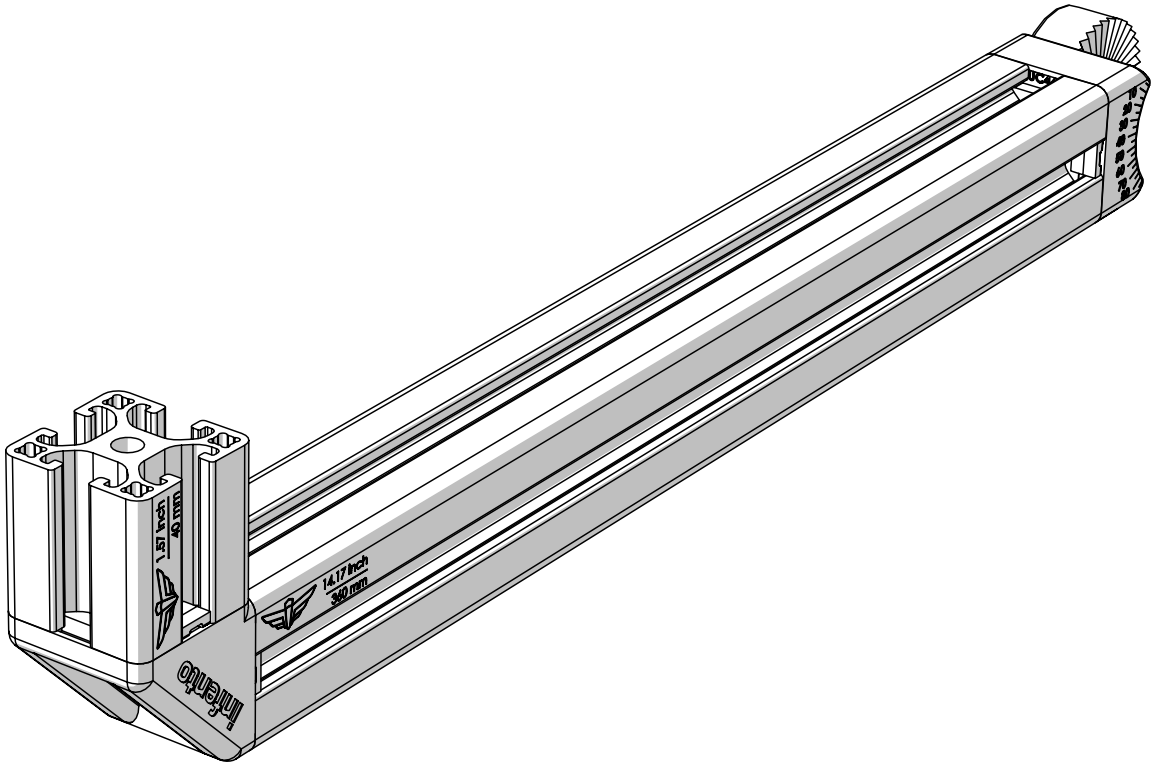

4

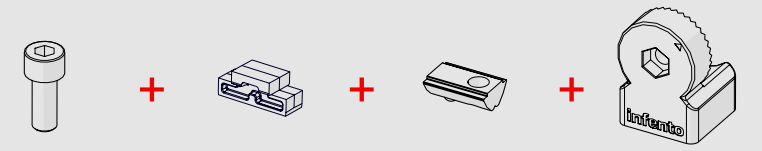

2x Bolt M8x20 + 4x T-Positioning block + 1x Profile nut short + 2x Multi angle joint

A

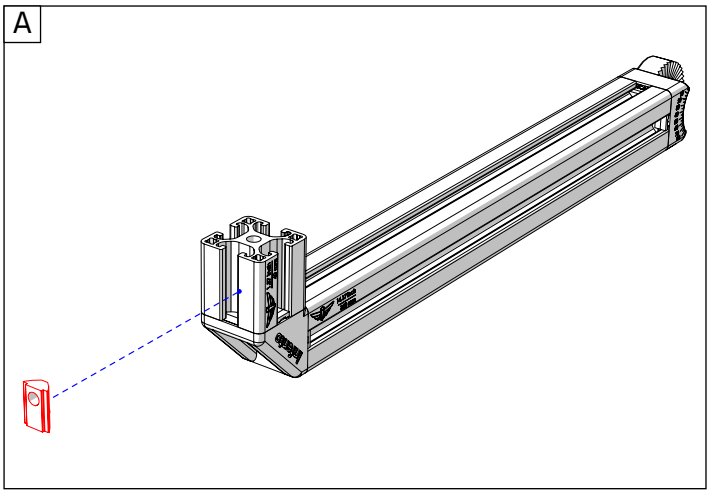

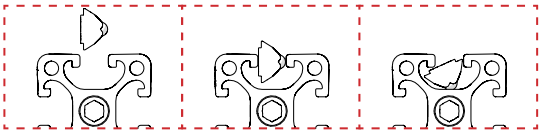

B

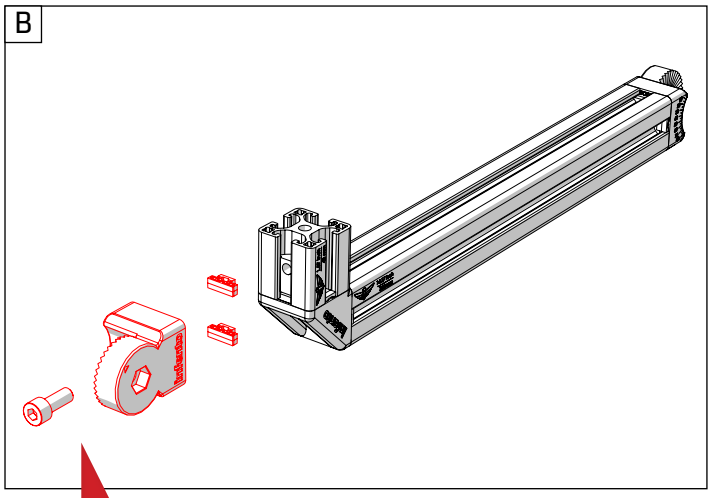

C

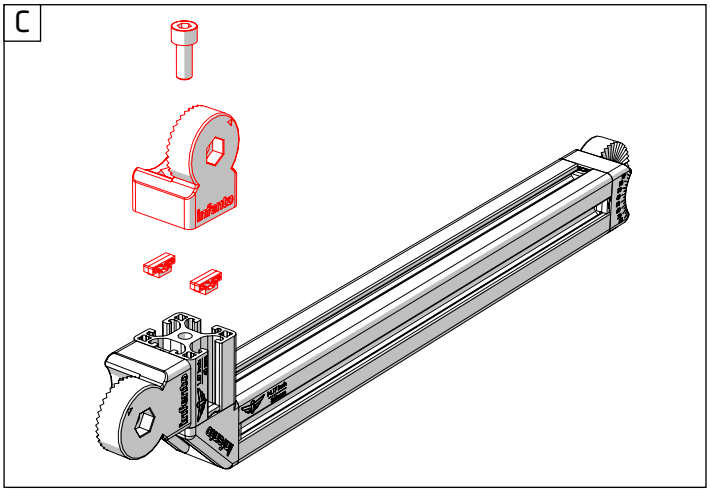

When tightening the bolt always check whether the profile nut remains perfectly straight in the slot. If this becomes crooked, you can push against the side of the profile bolt with the Allen key to correct this.

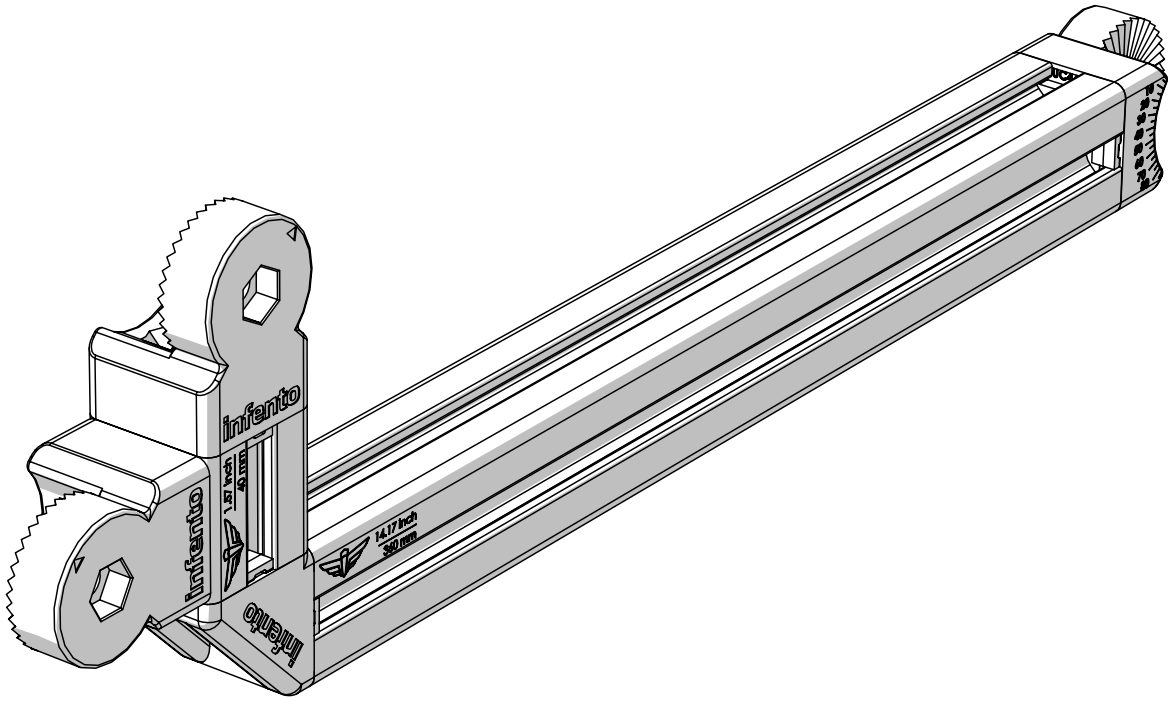

5

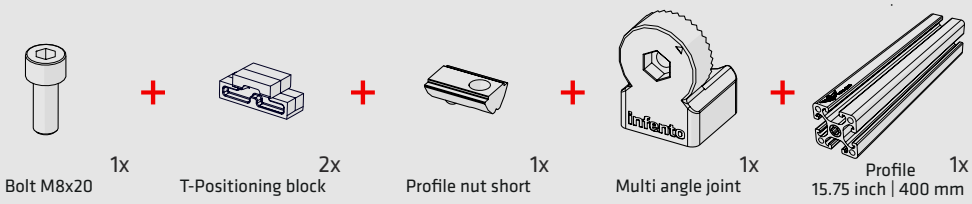

1x Bolt M8x20 + 2x T-Positioning block + 1x Profile nut short + 1x Multi angle joint + Profile 1x 15.75 inch | 400 mm

A

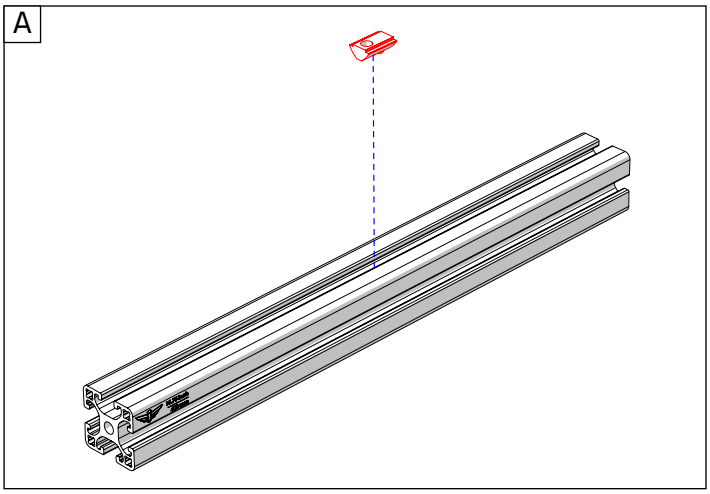

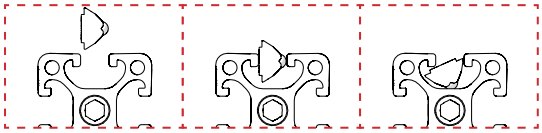

B

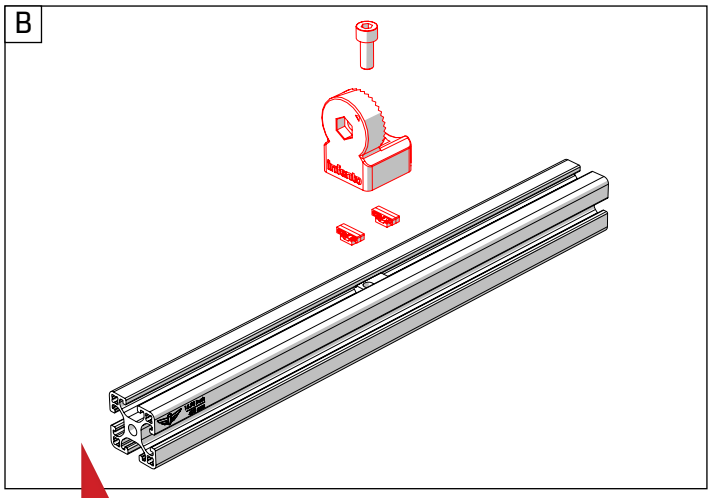

When tightening the bolt always check whether the profile nut remains perfectly straight in the slot. If this becomes crooked, you can push against the side of the profile bolt with the Allen key to correct this.

C

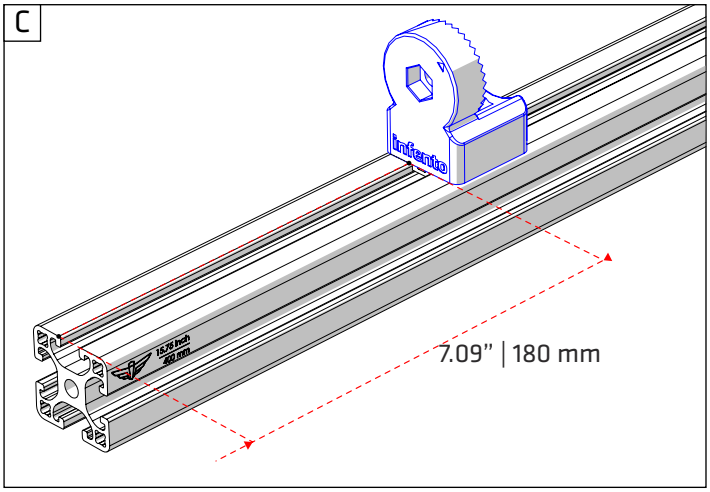

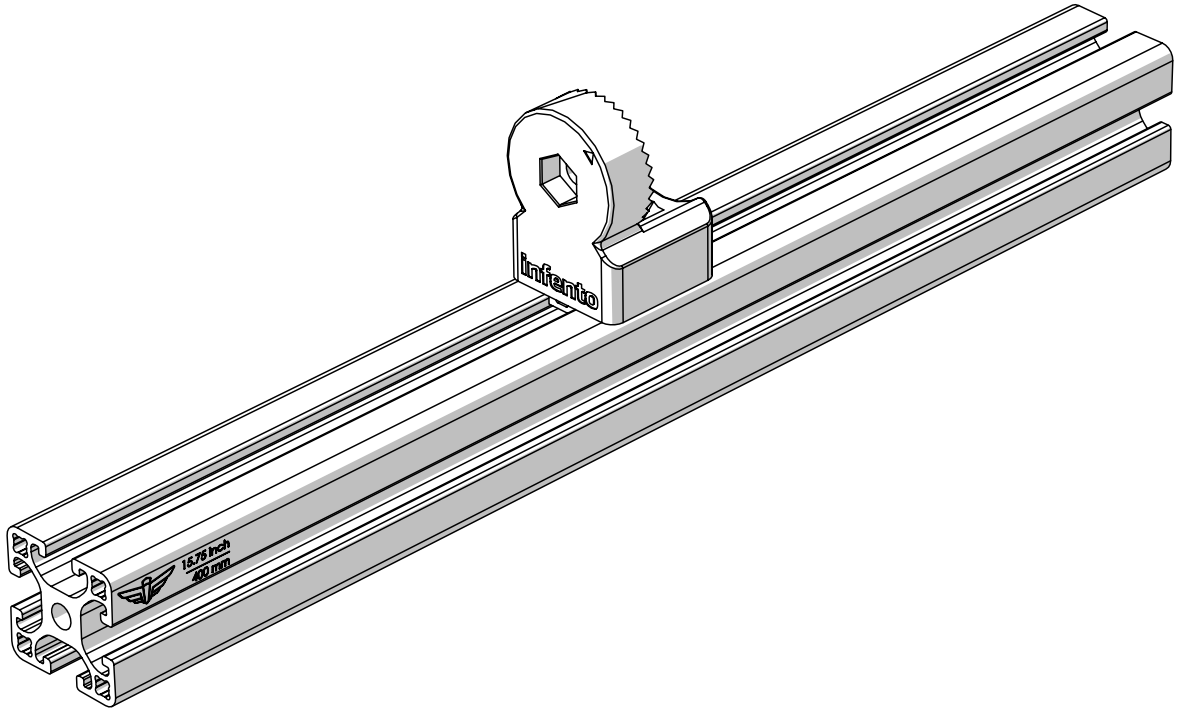

6

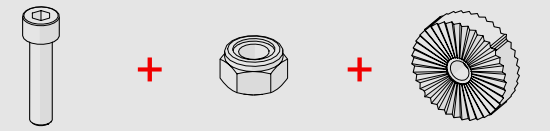

1x Bolt M8x35

1x Locknut M8

1x Knurled disc 2 stripes

A

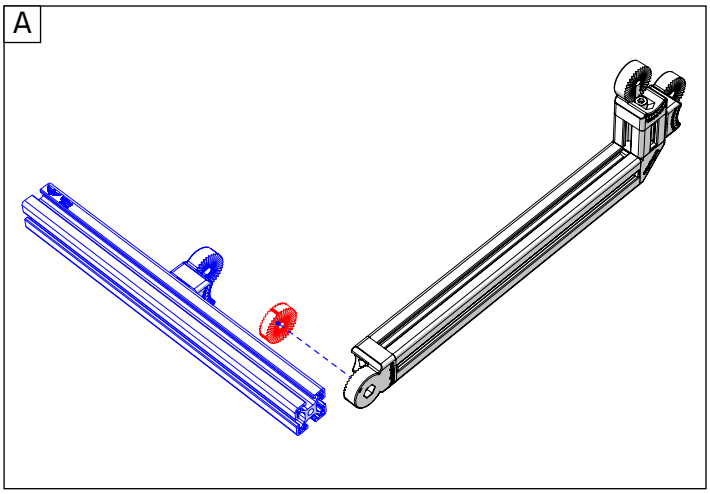

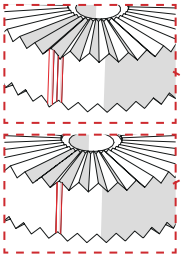

There are two types of knurled discs. Please see education section.

B

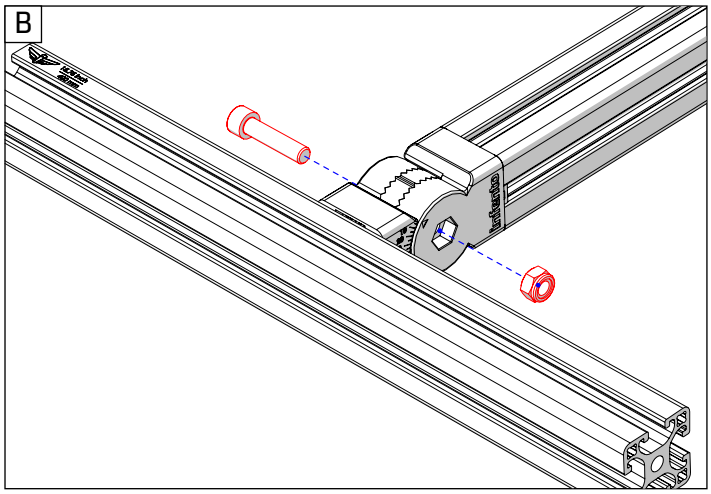

C

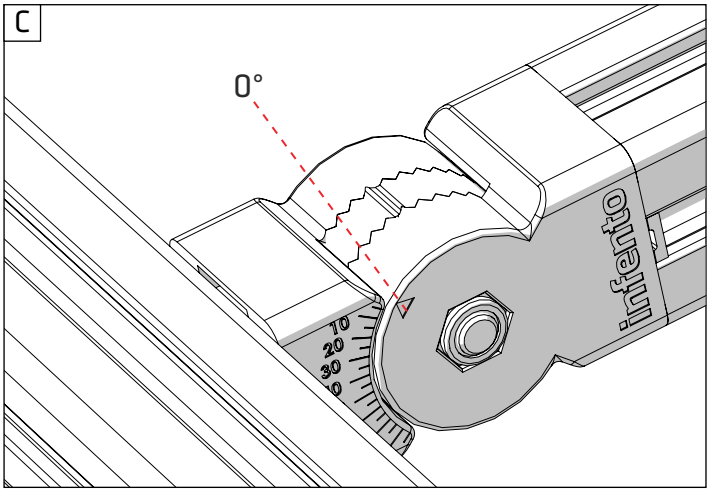

Depending on your Kit, the knurled discs can be of a different type, looking like this:

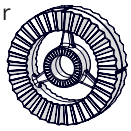

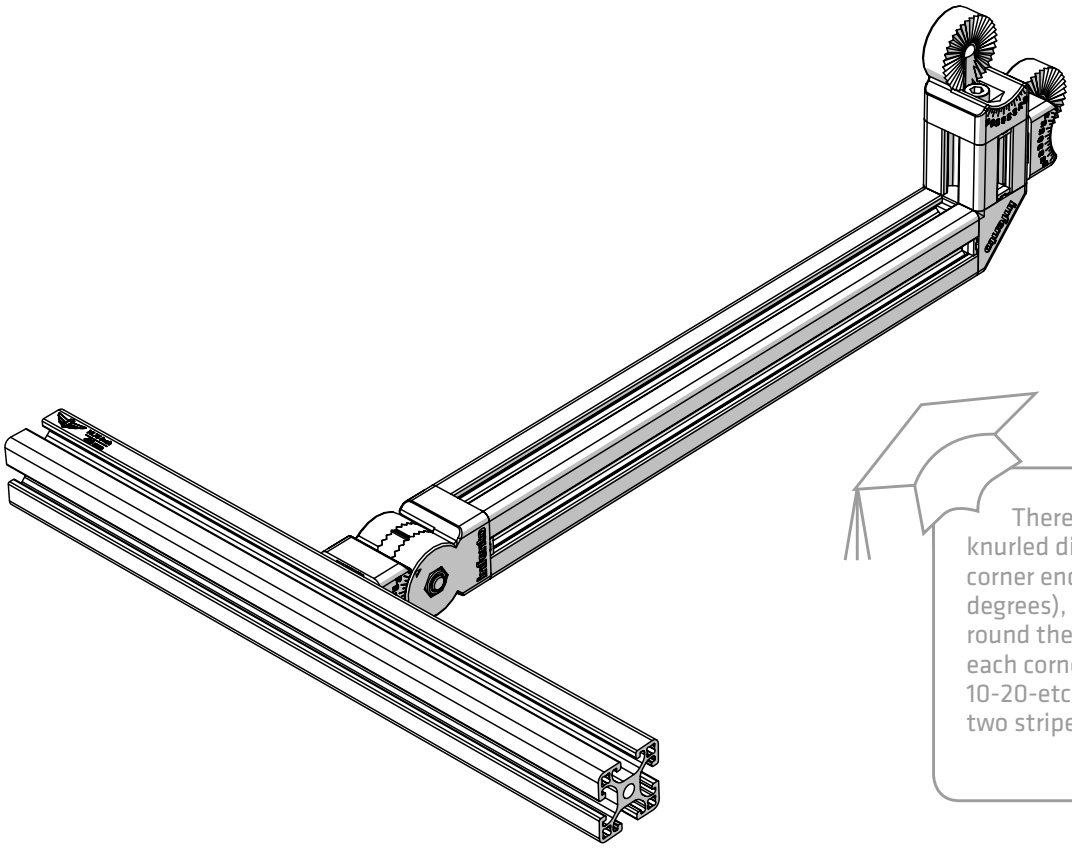

There are two different knurled discs. One for each corner ending in a 5 (5-15-25-etc. degrees), which has one stripe round the outside, and one for each corner that ends in a 0 (0-10-20-etc degrees), which has two stripes round the outside.

7

1x Bolt M8x20 + 2x T-Positioning block + 1x Profile nut short + 1x Multi angle joint

A

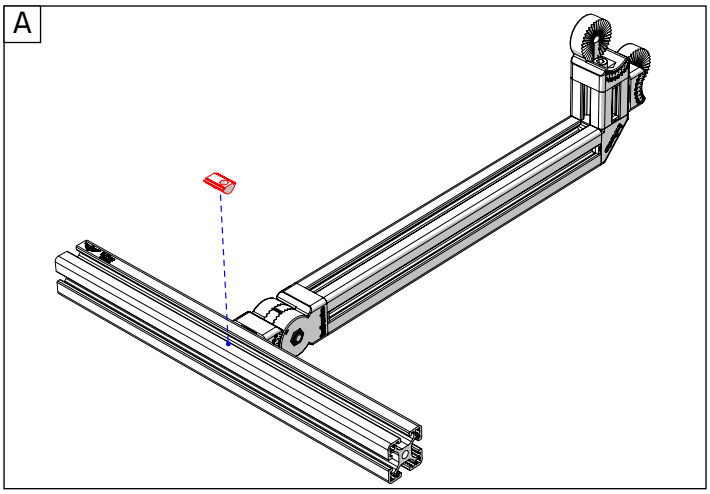

B

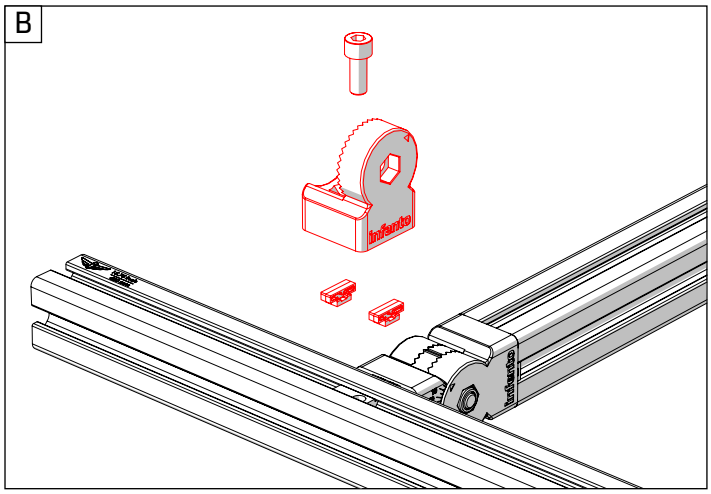

C

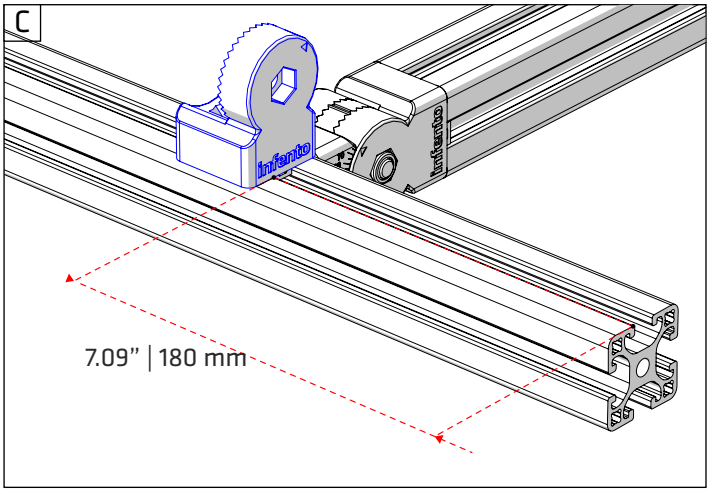

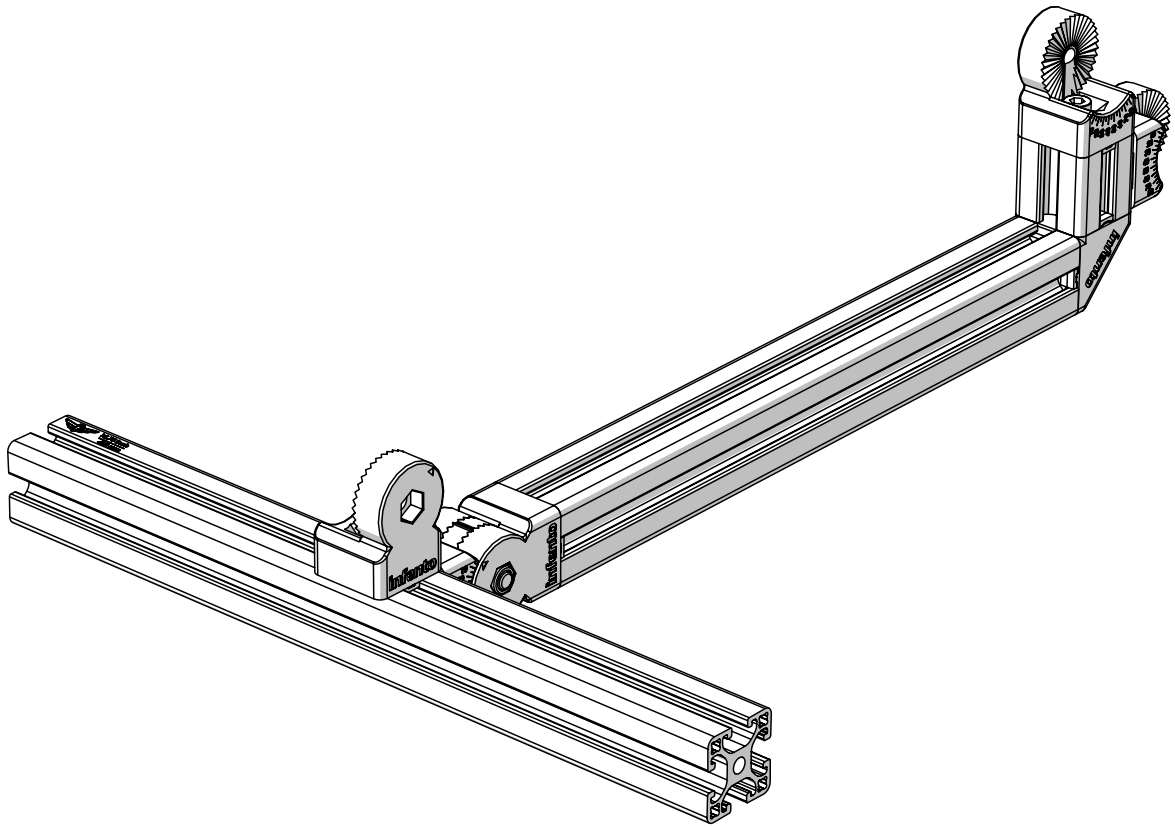

8

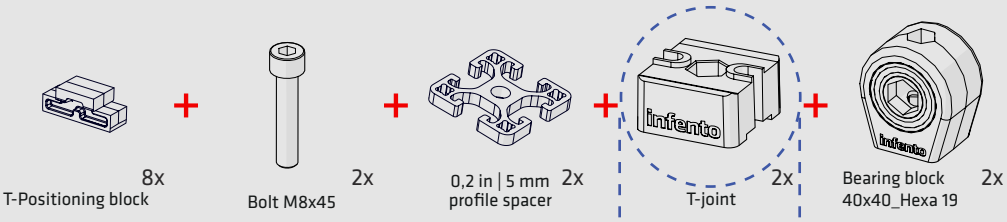

Depending on your Kit, the T-joint might look like this. The new T-joint doubles as a profile connector (part A)

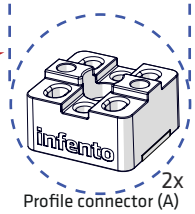

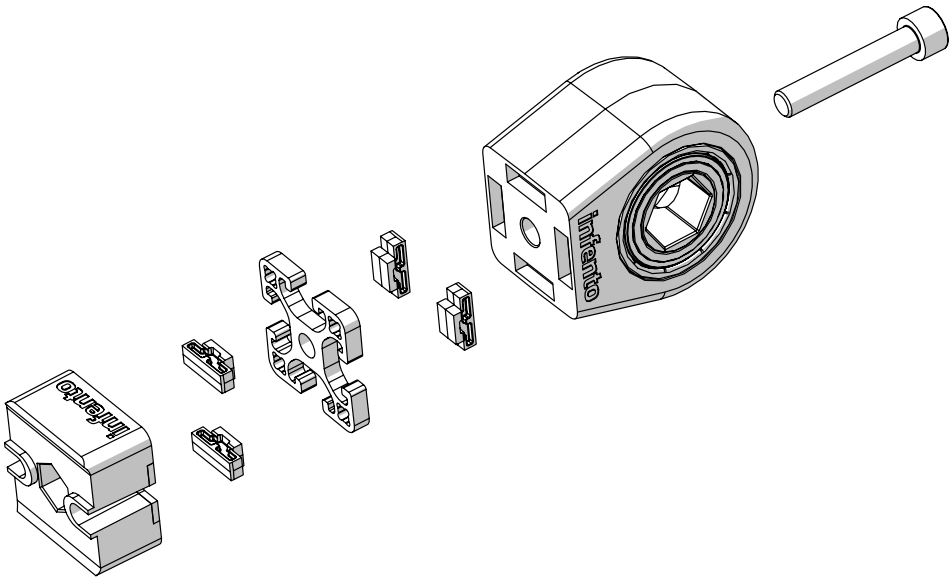

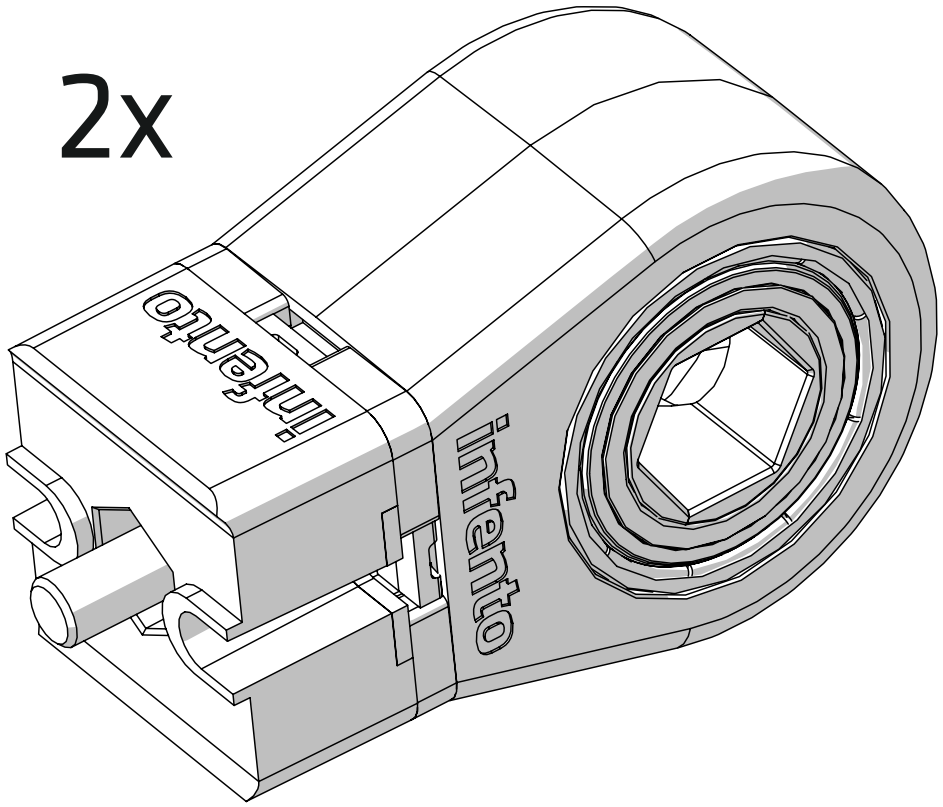

9

1x
Profile nut short

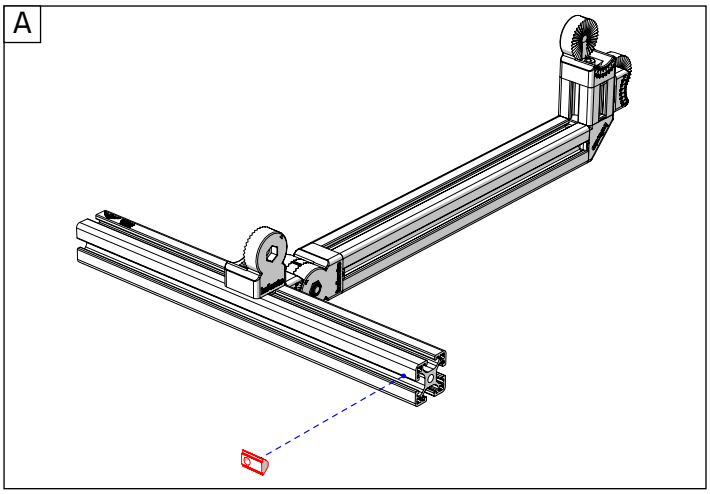

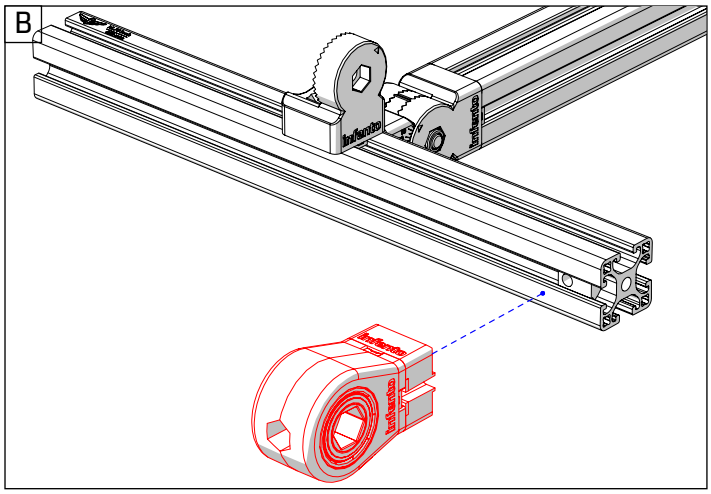

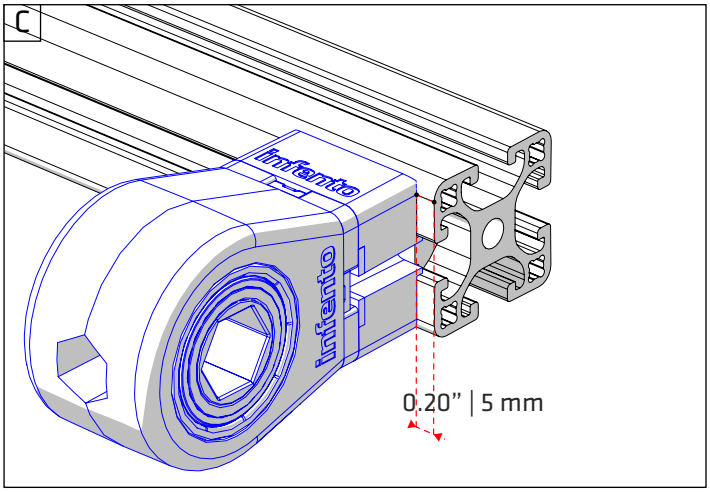

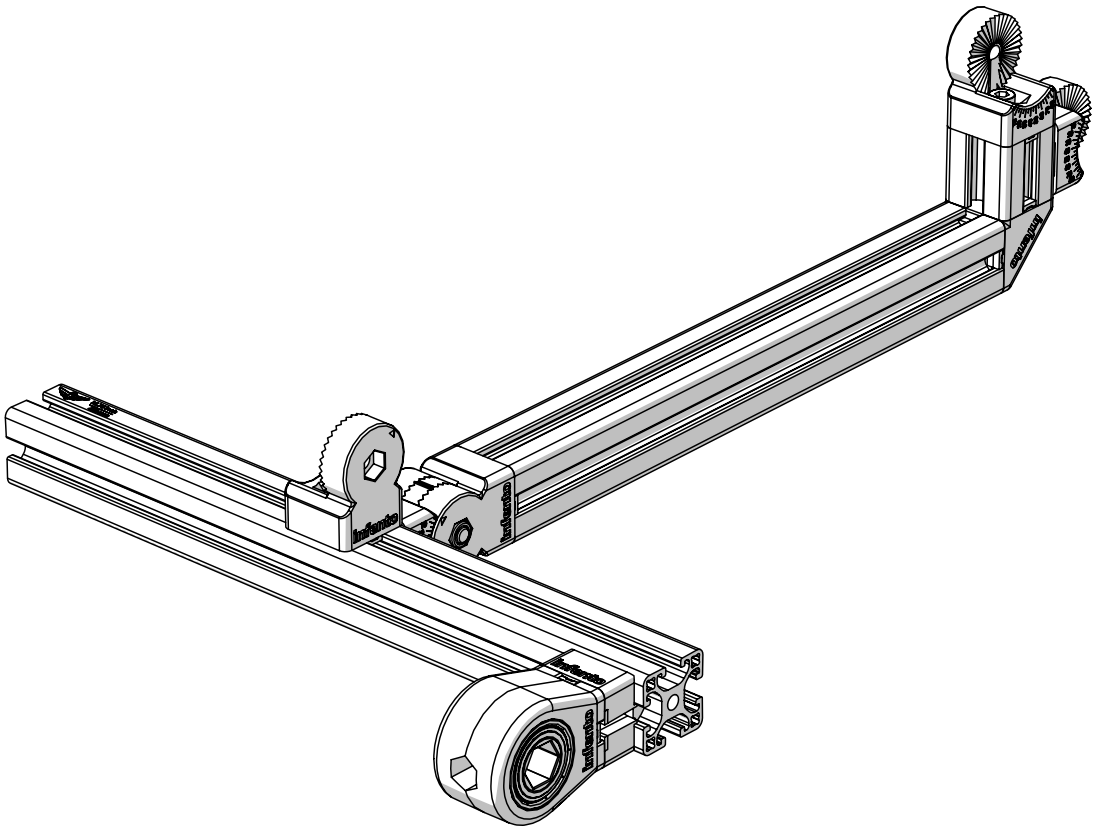

10

1x
Profile nut short

A

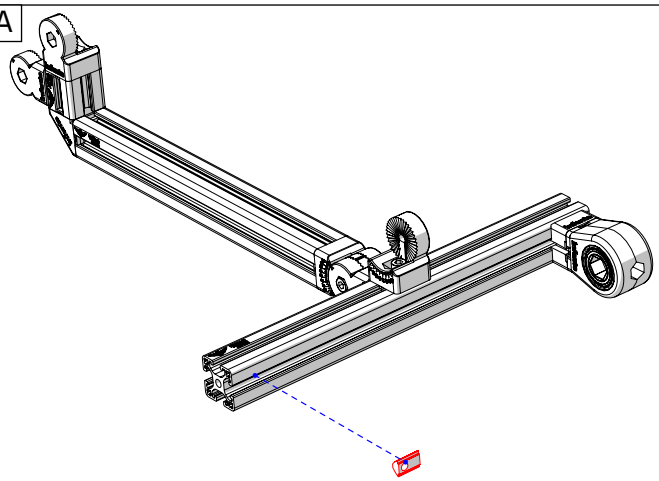

B

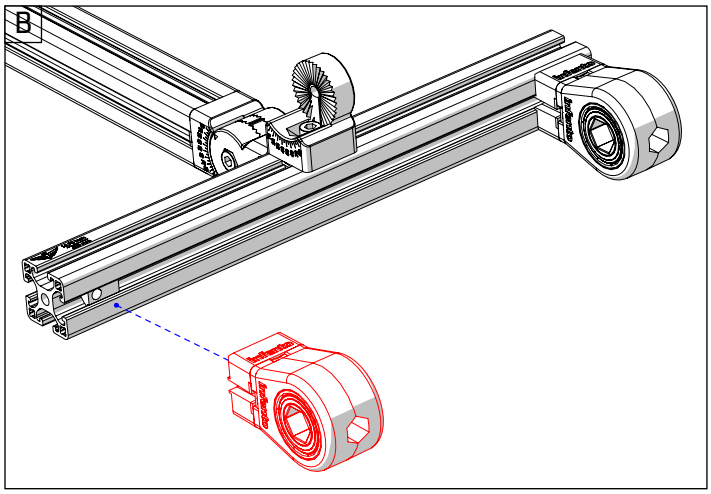

C

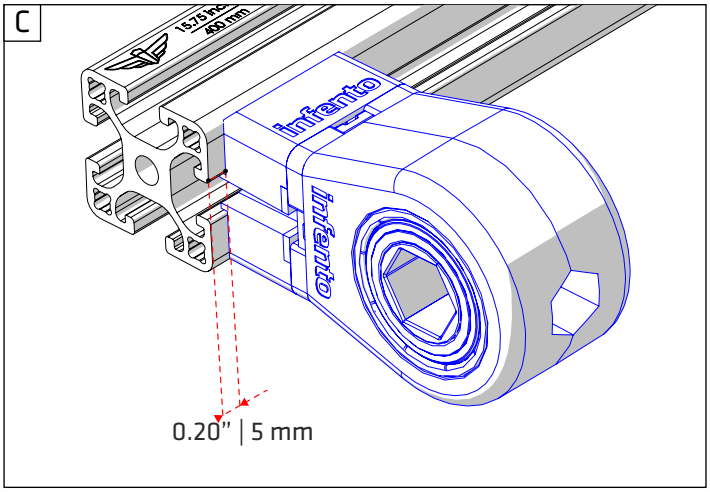

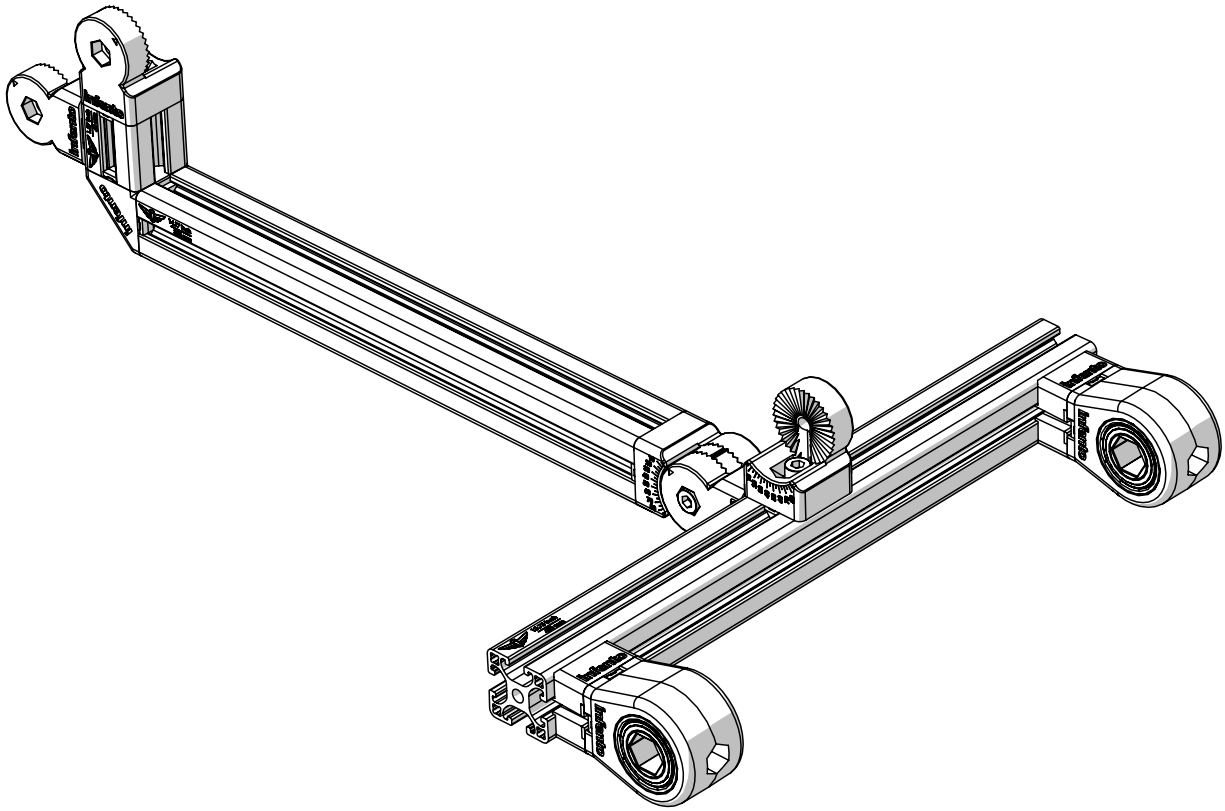

11

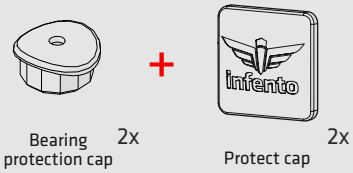
Bearing protection cap
2x
Protect cap
2x

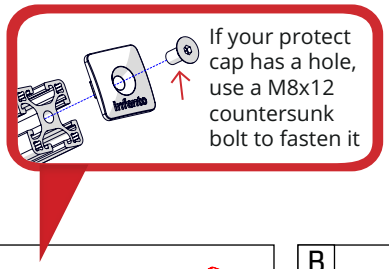
If your protect cap has a hole, use a M8x12 countersunk bolt to fasten it

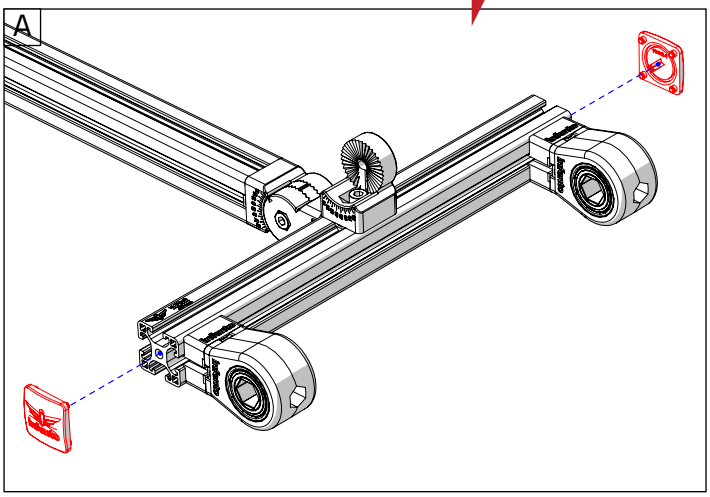
A

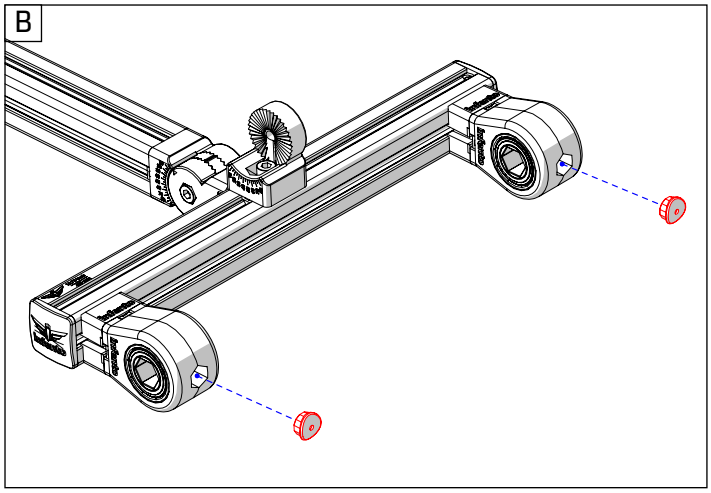
B

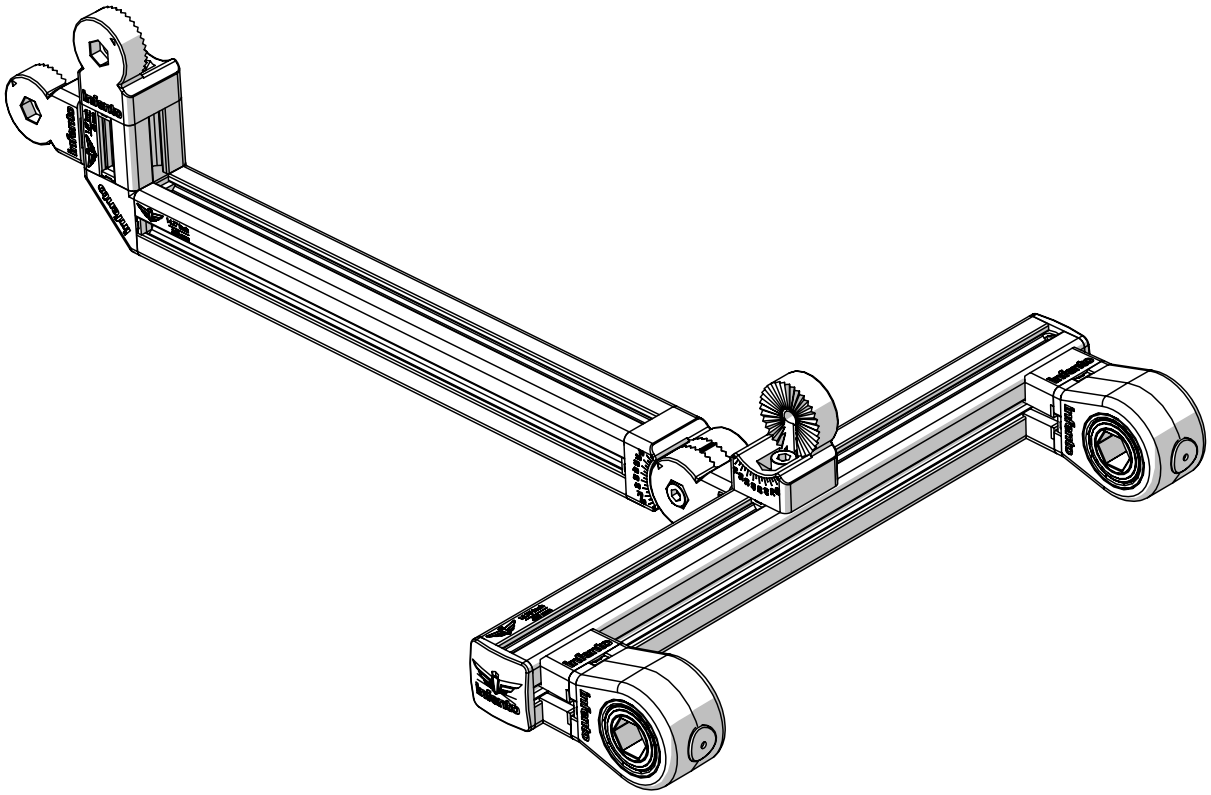

12

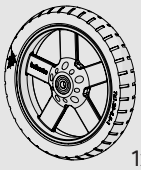

1x
7 inch wheel

A

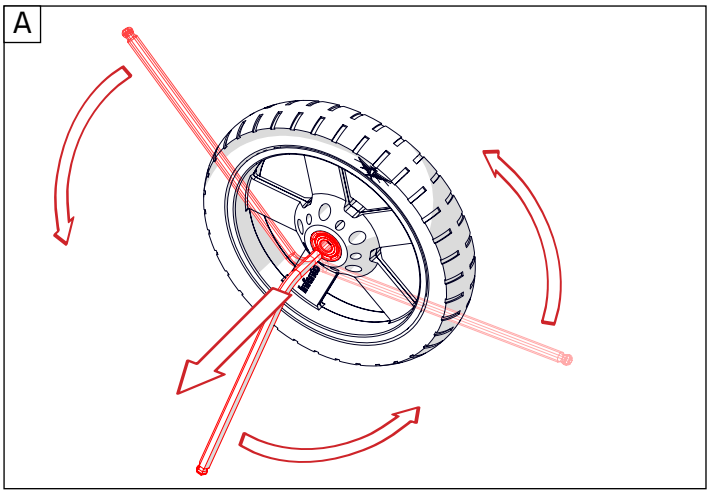

B

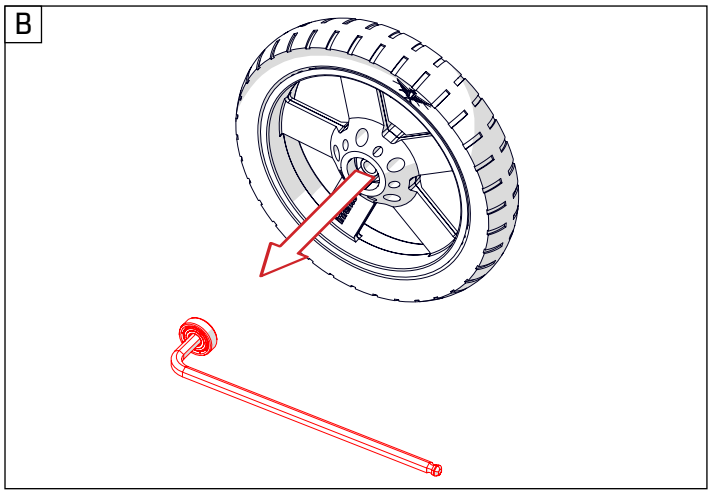

C

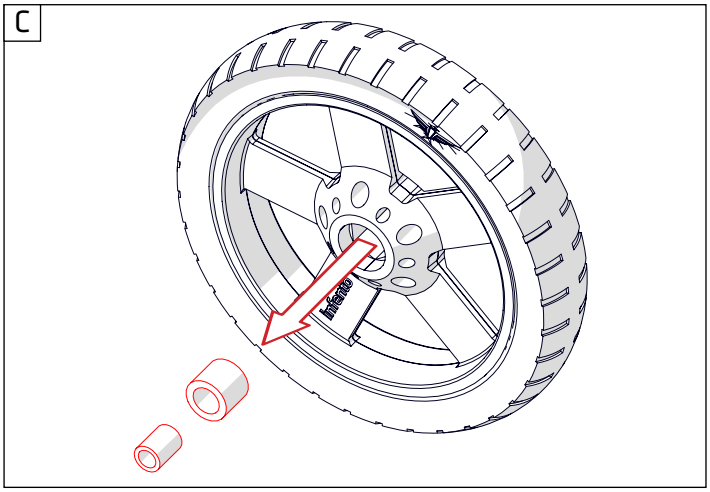

D

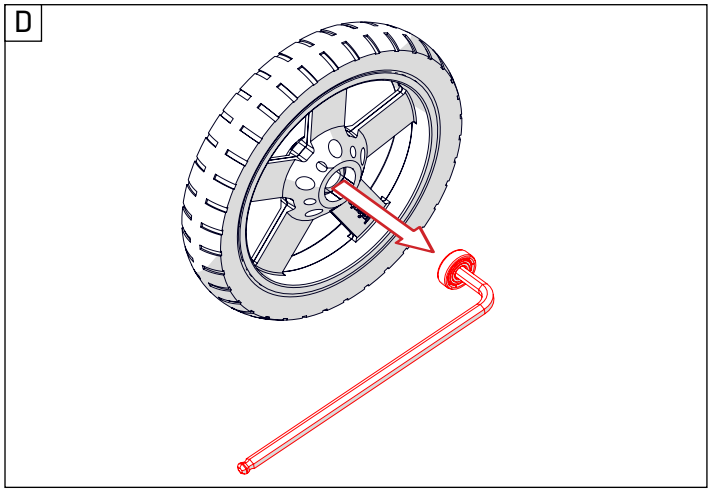

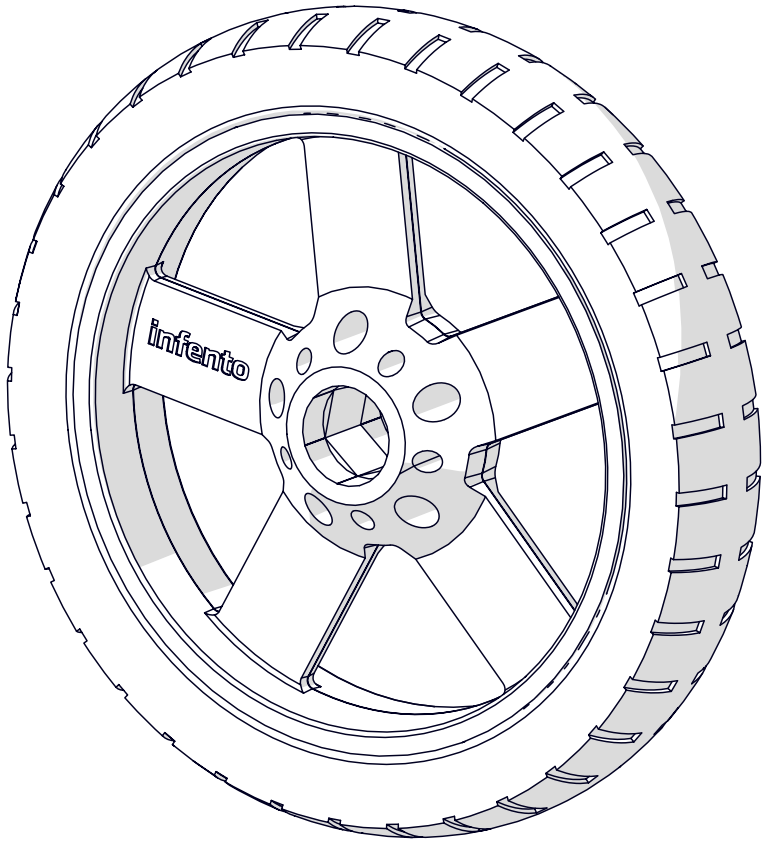

13

Spacer 0.04inch | 1 mm 1x

Spacer 0.2 inch | 5 mm 1x

Spacer 0.39 inch | 10 mm 1x

Washer M8-24 1x

Bolt M8x20 1x

Axle 17.72inch | 450mm 1x

A

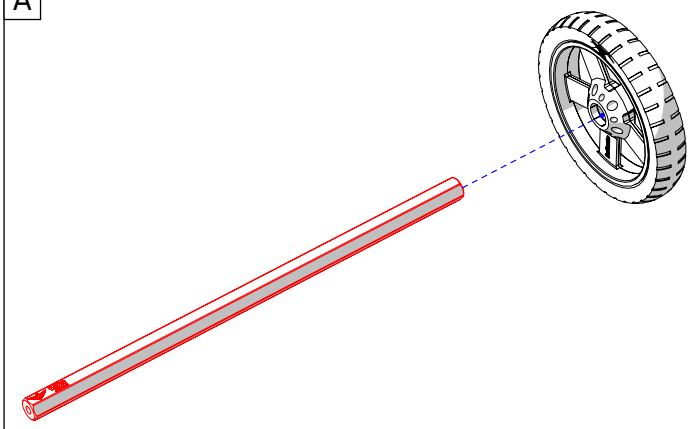

B

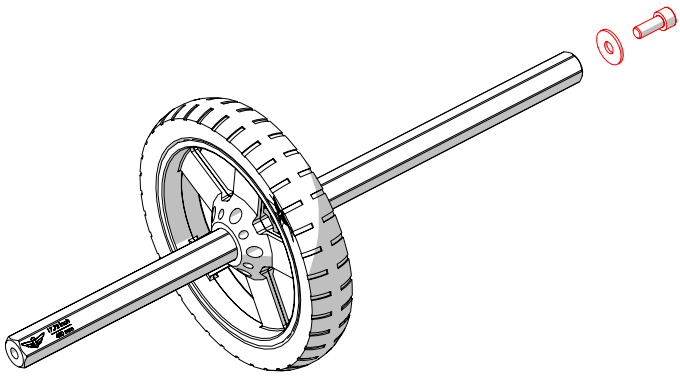

C

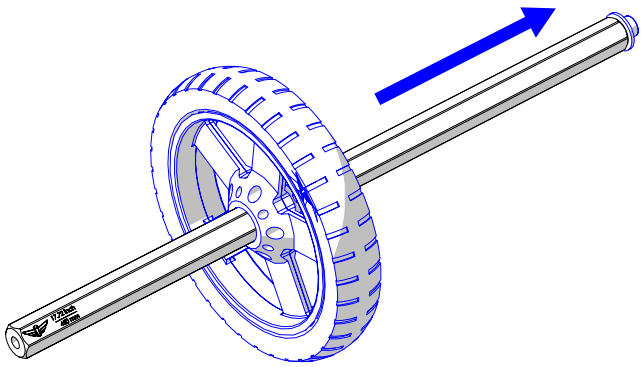

D

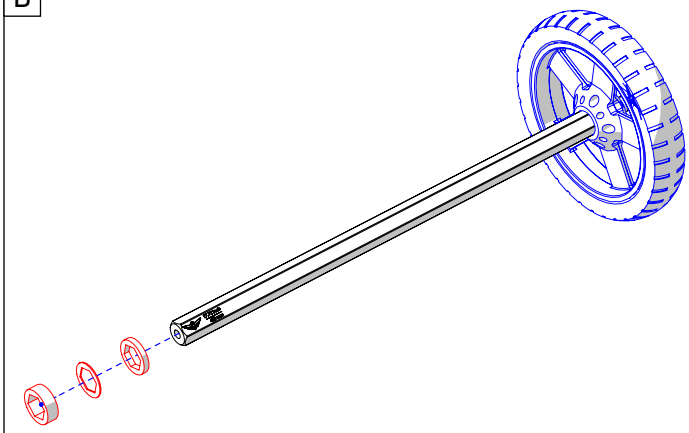

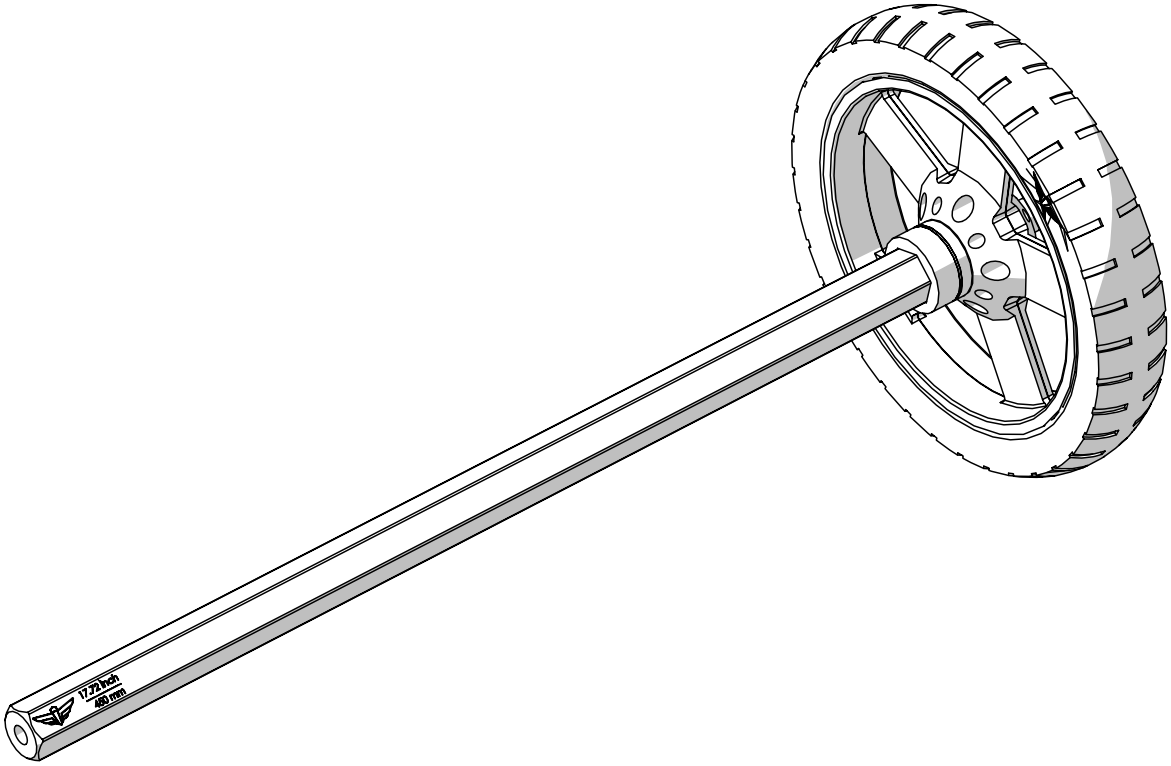

14

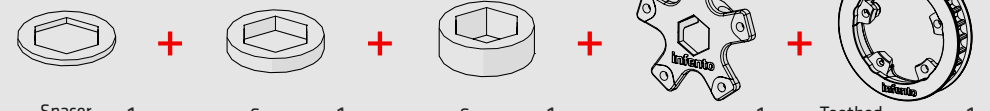

Spacer 0.08inch | 2 mm 1x

Spacer 0.2 inch | 5 mm 1x

Spacer 0.39 inch | 10 mm 1x

Axle flange 1x

Toothed belt pulley 26T 1x

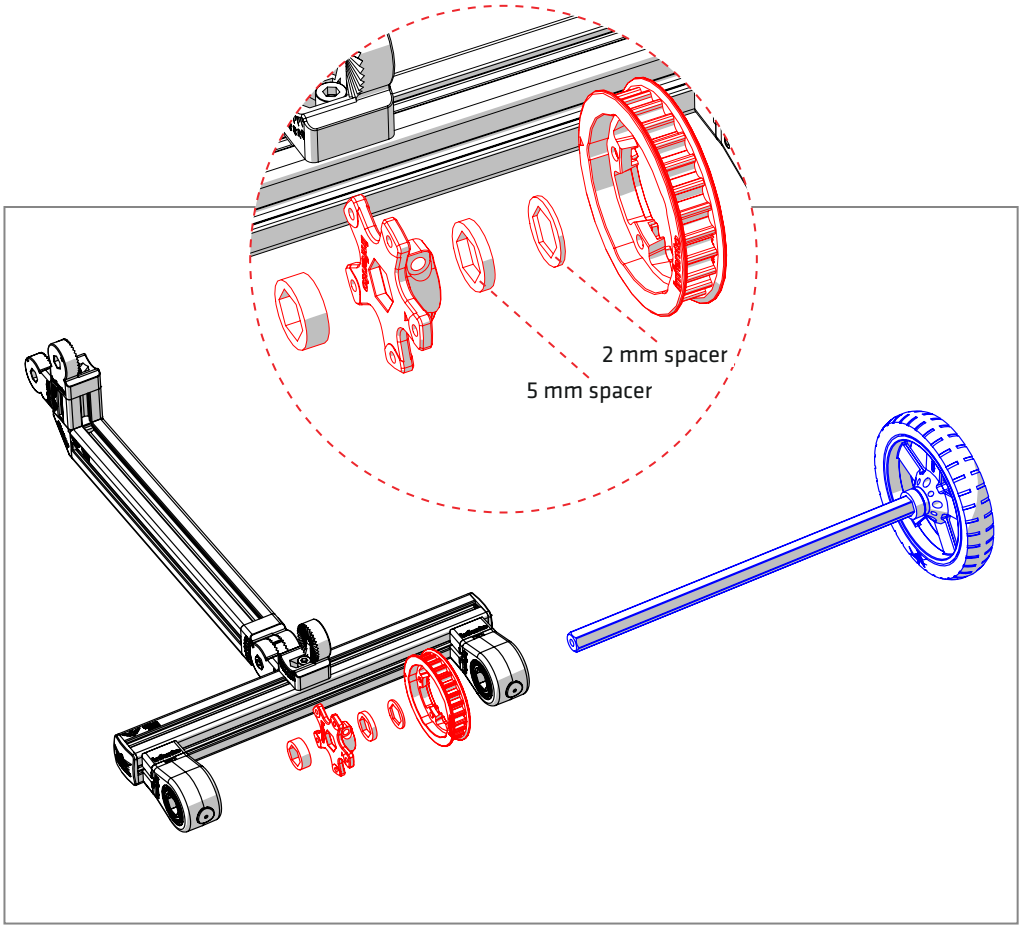

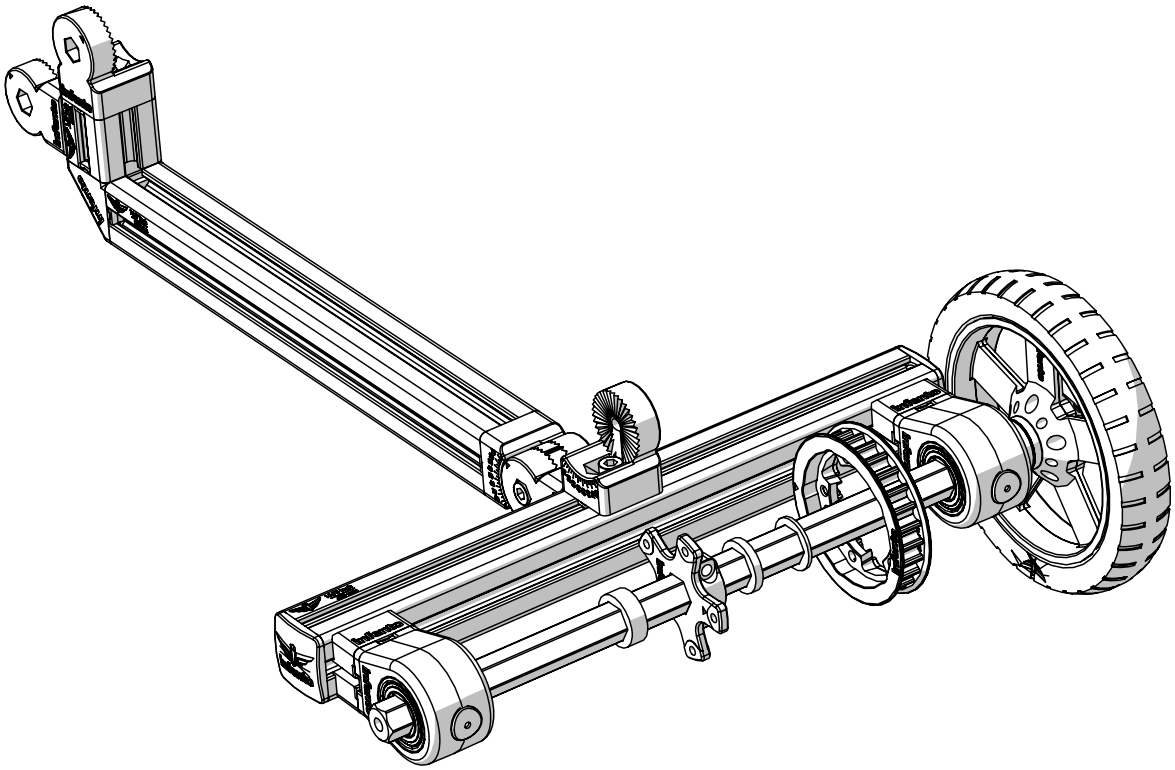

15

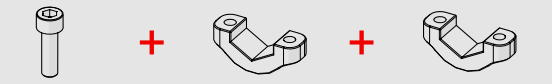

Bolt M6x20 4x

Clamping part holes with M6 thread 2x

Clamping part holes without thread 2x

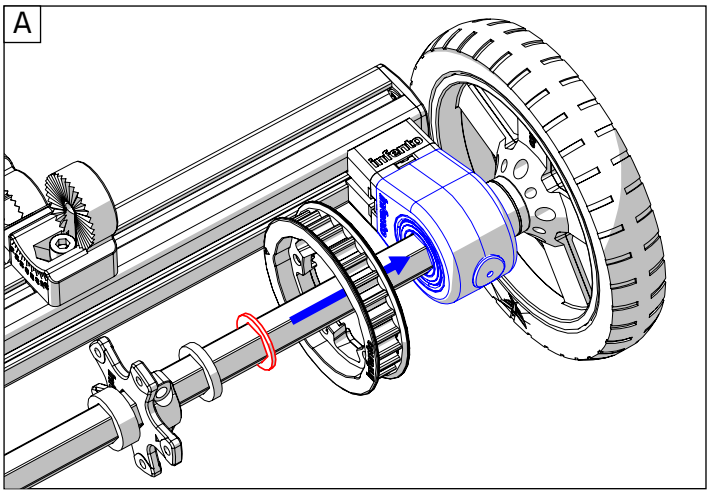

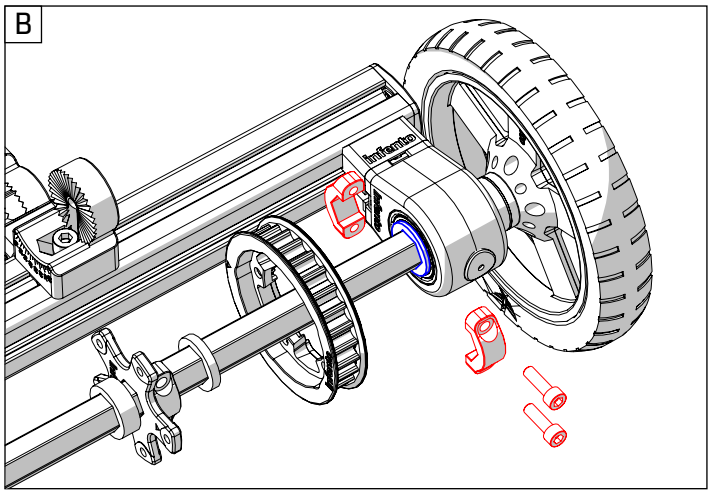

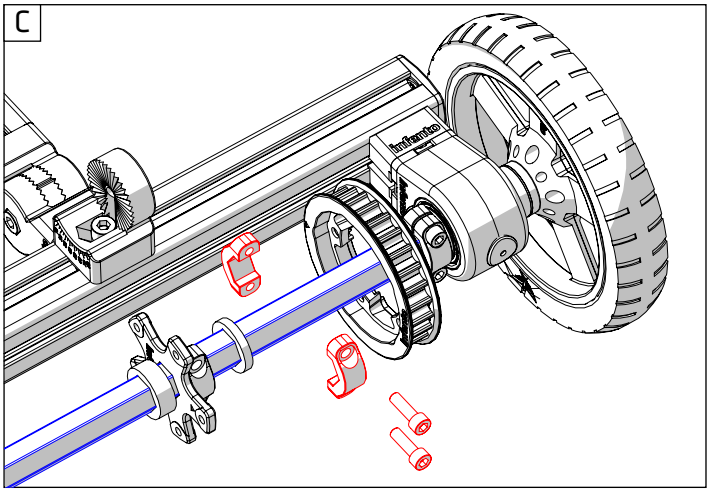

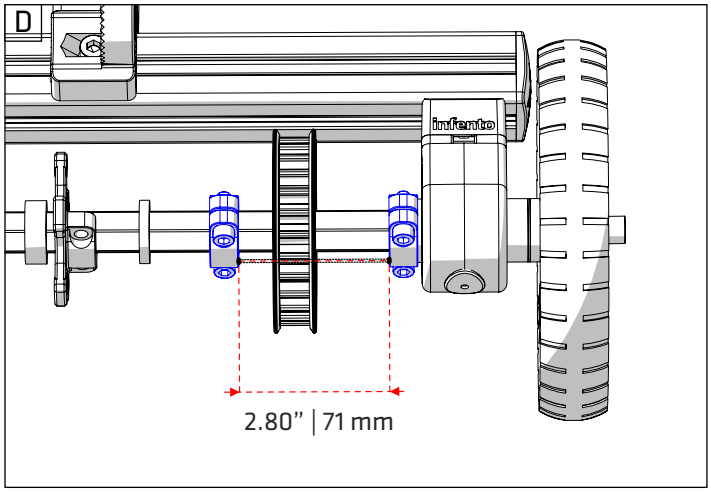

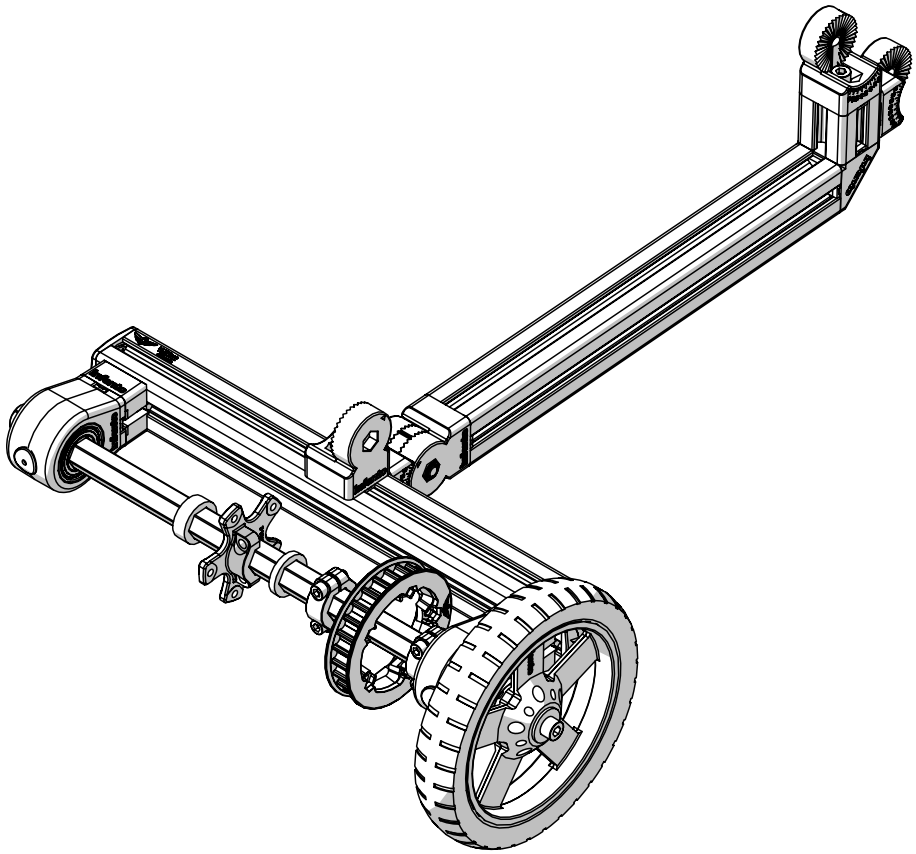

16

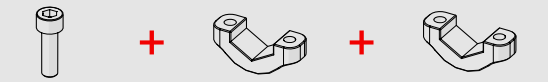

Bolt M6x20 4x + Clamping part holes with M6 thread 2x + Clamping part holes without thread 1x

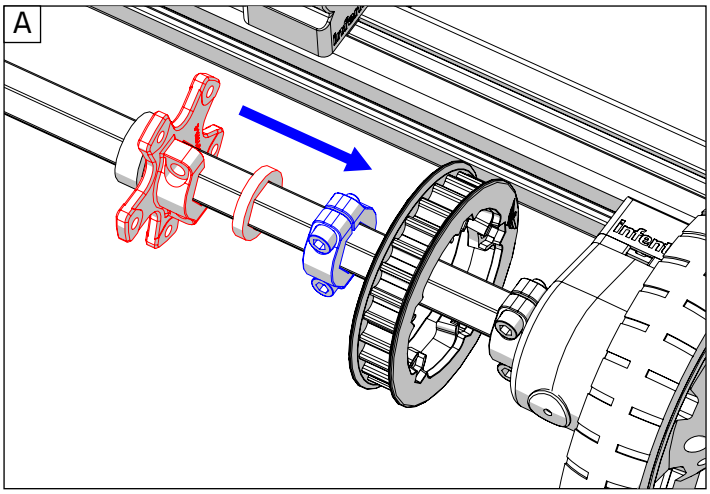

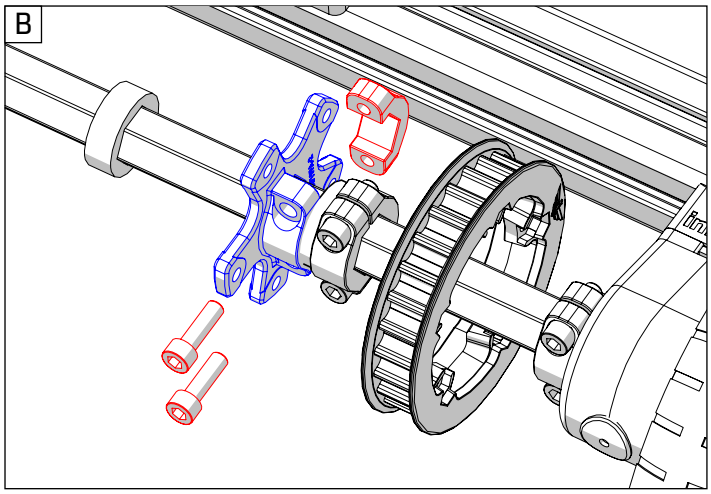

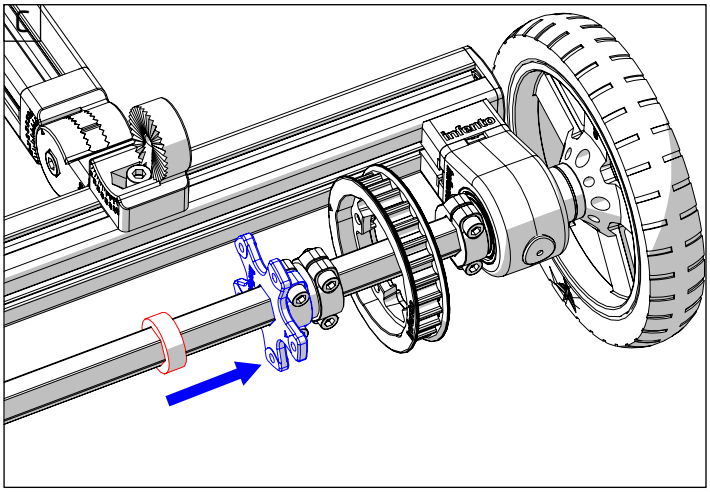

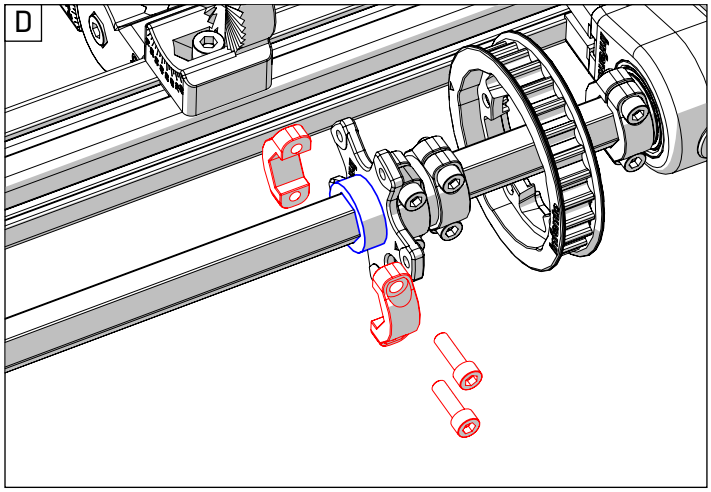

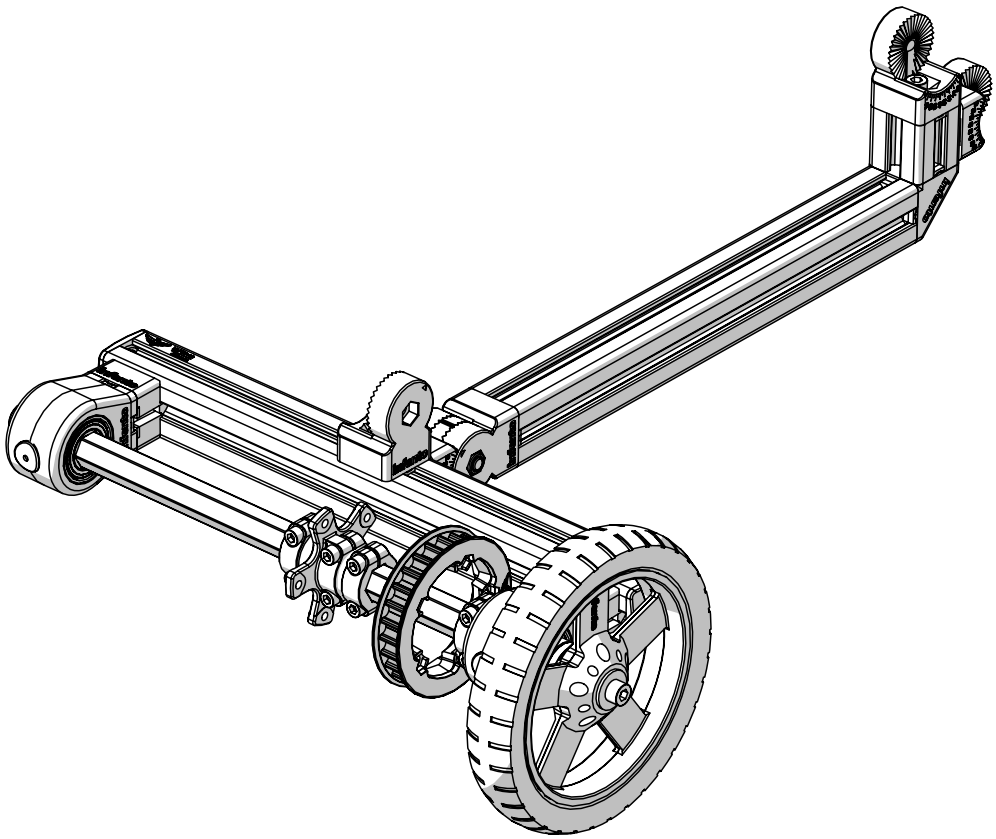

17

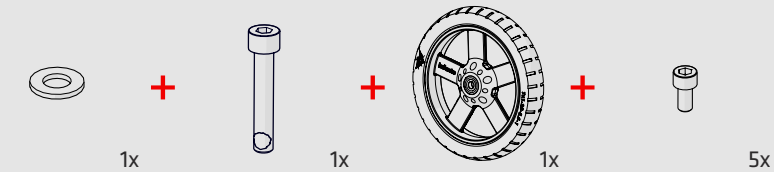

1x Washer M8-16 + 1x Bolt M8x45 nylock + 1x 7 inch wheel + 5x Bolt M6x12

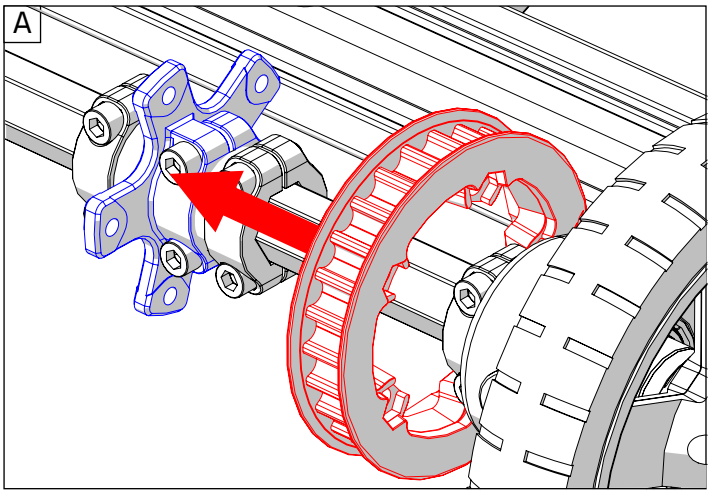

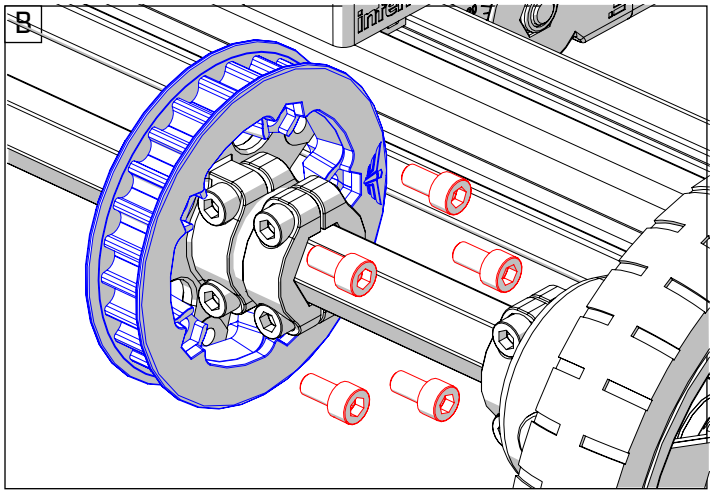

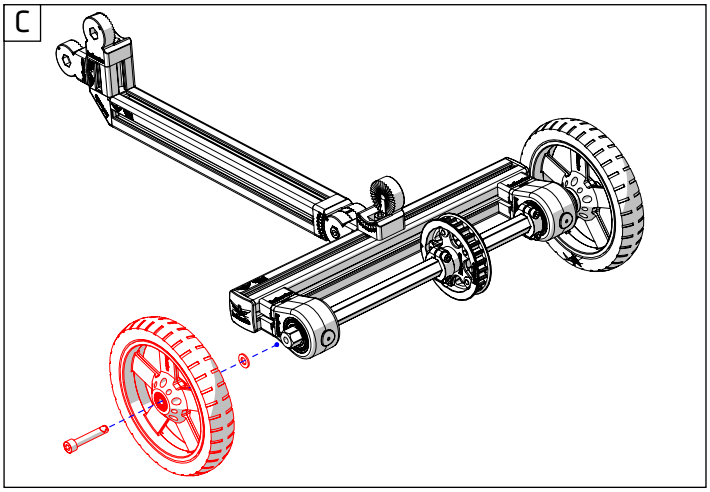

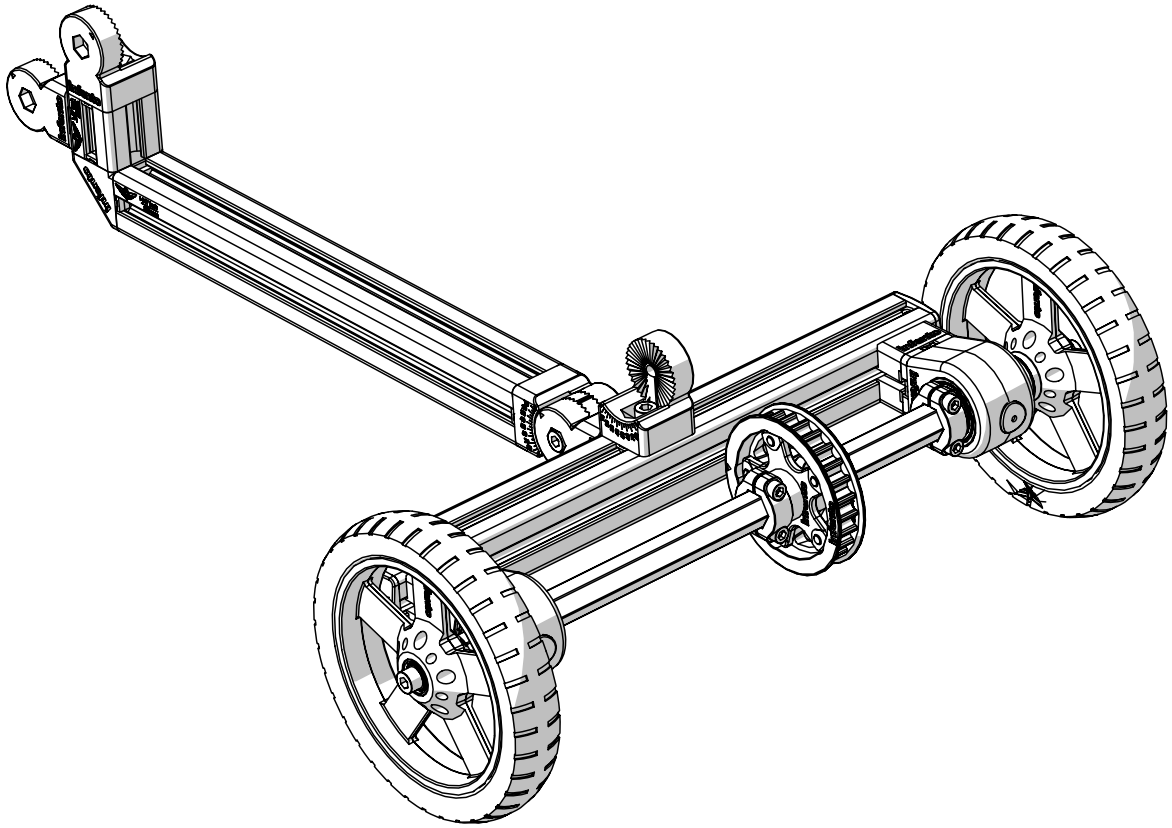

18

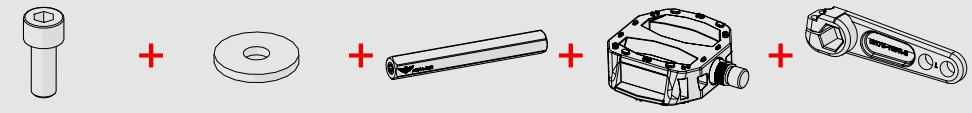

3x Bolt M8x20

1x Washer M8-24

1x Axle 4.8 inch | 122 mm

1x Pedal left

1x Crank left

A

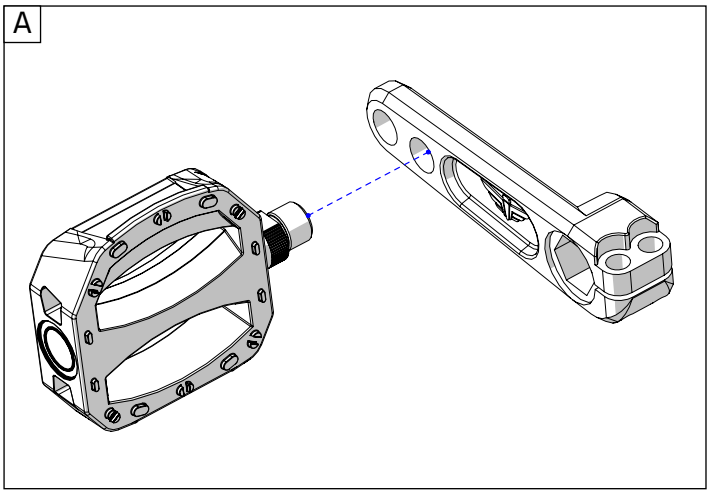

B

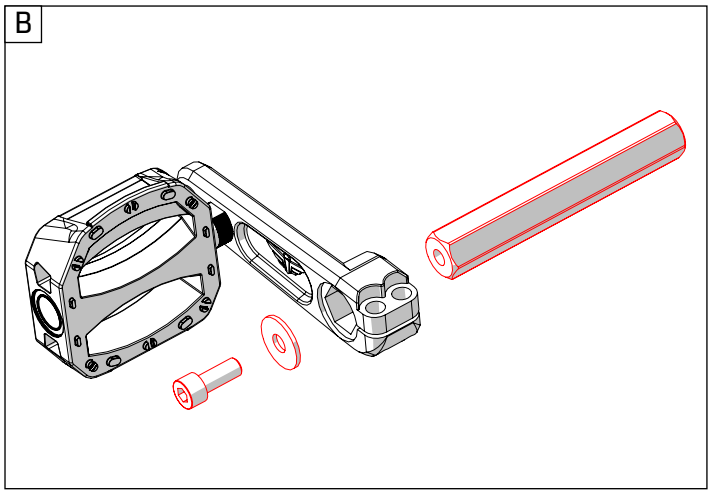

C

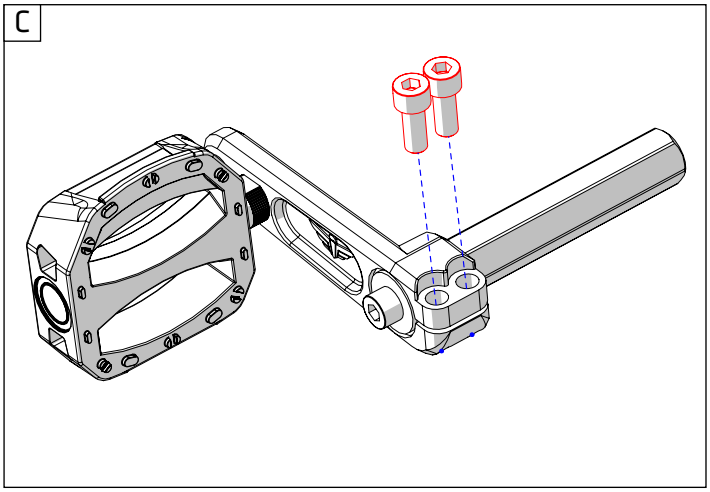

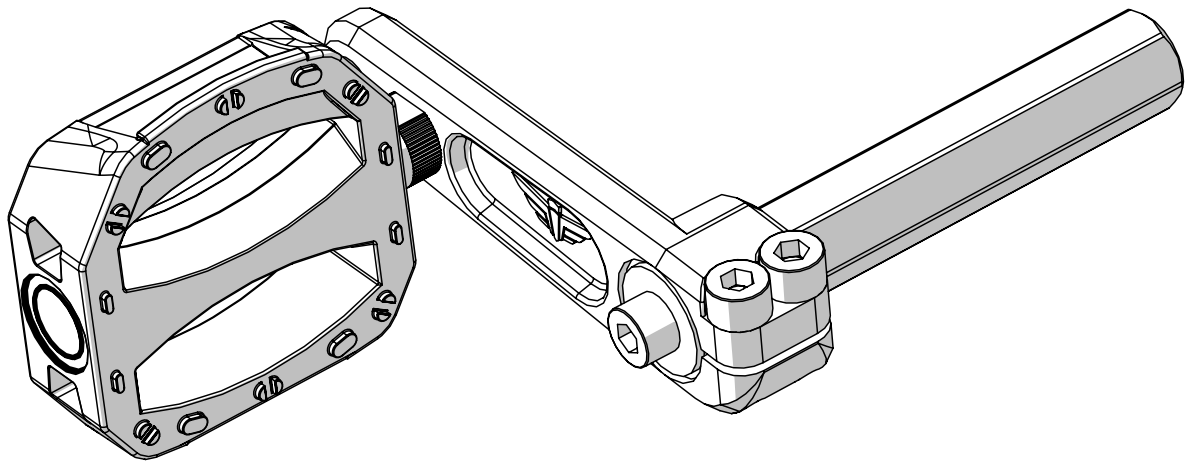

19

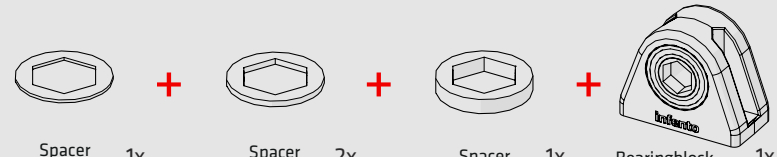
Spacer
0.04inch | 1 mm
1x
Spacer
0.08inch | 2 mm
2x
Spacer
0.2 inch | 5 mm
1x
Bearingblock
40x80_hexa 19
1x

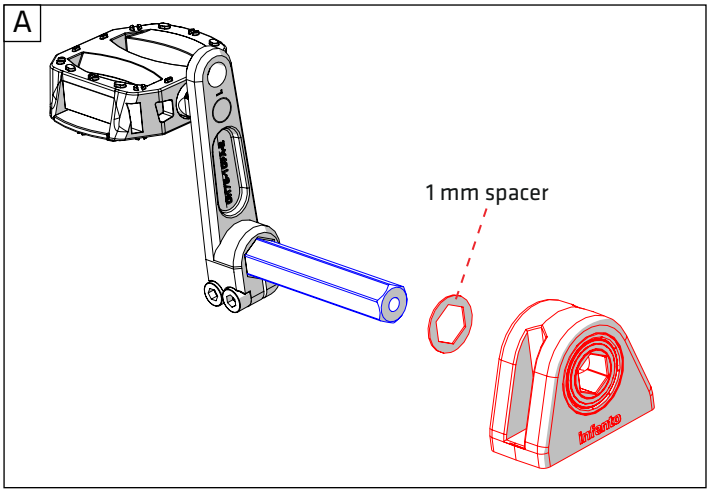
A
1 mm spacer

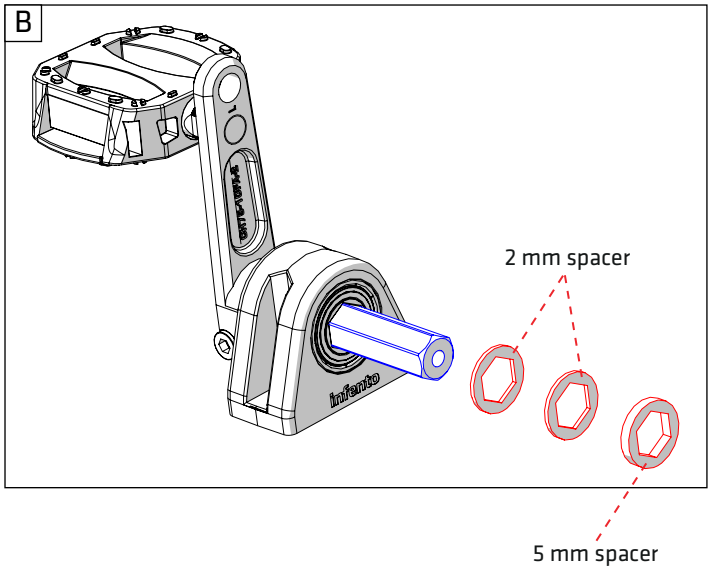
B
2 mm spacer
5 mm spacer

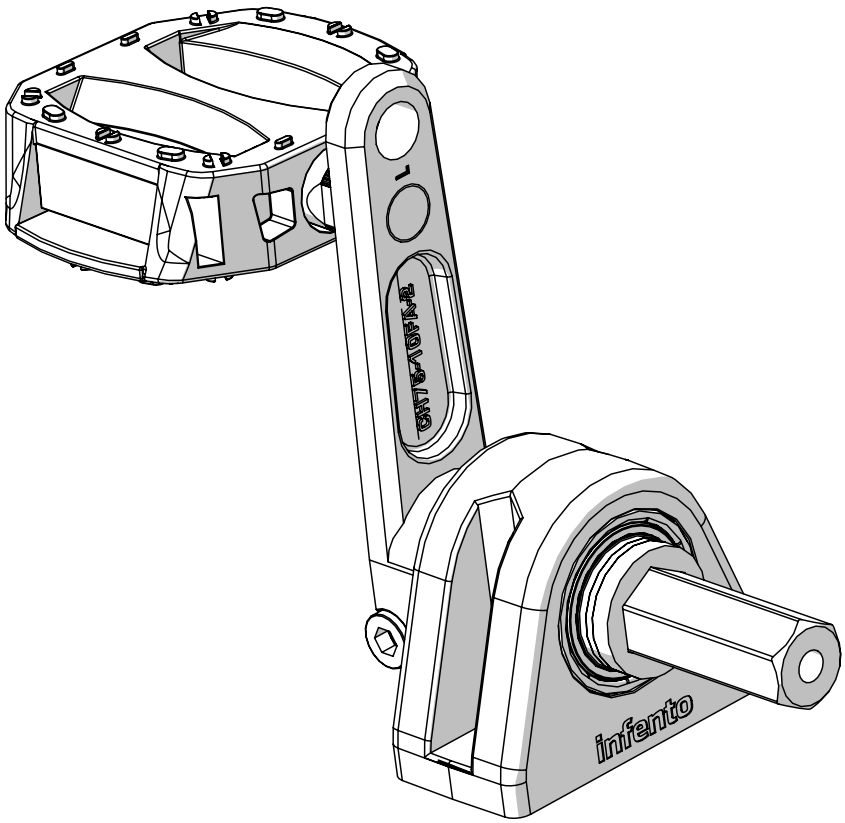

20

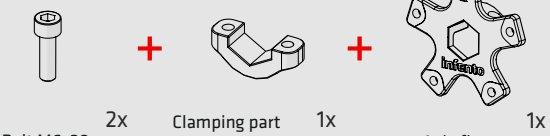

Bolt M6x20 2x + Clamping part holes with M6 thread 1x + Axle flange 1x

A

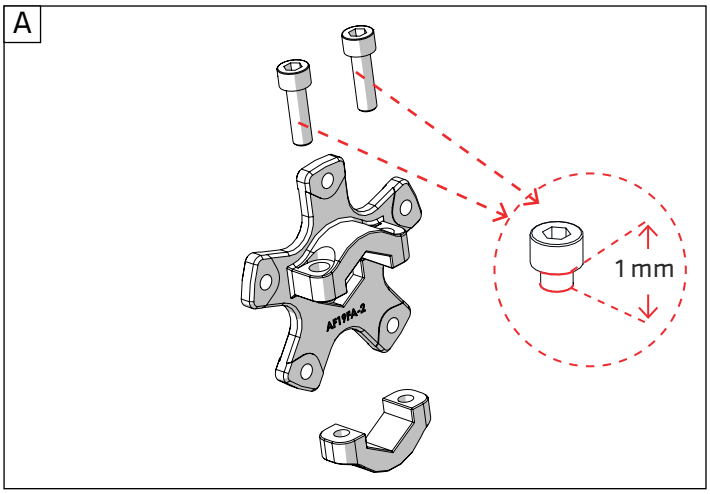

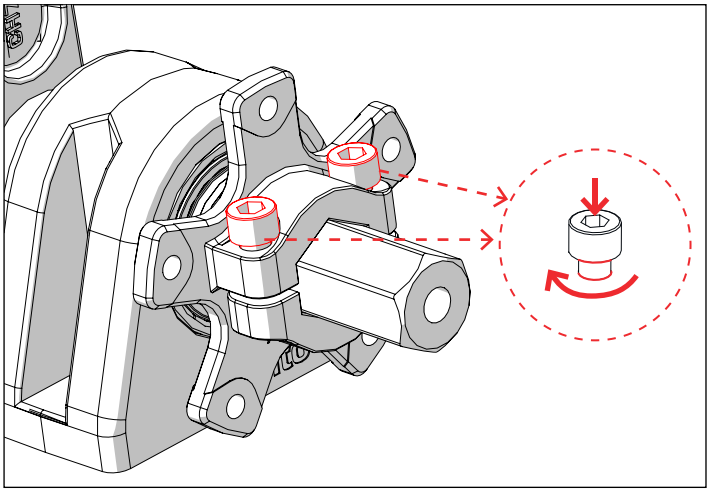

B

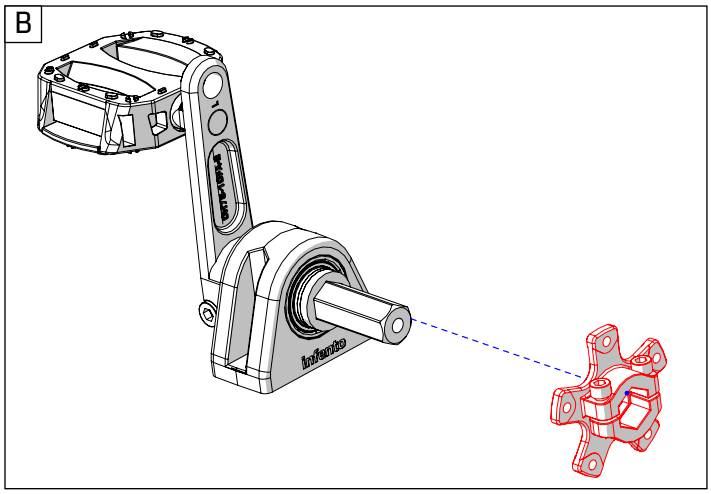

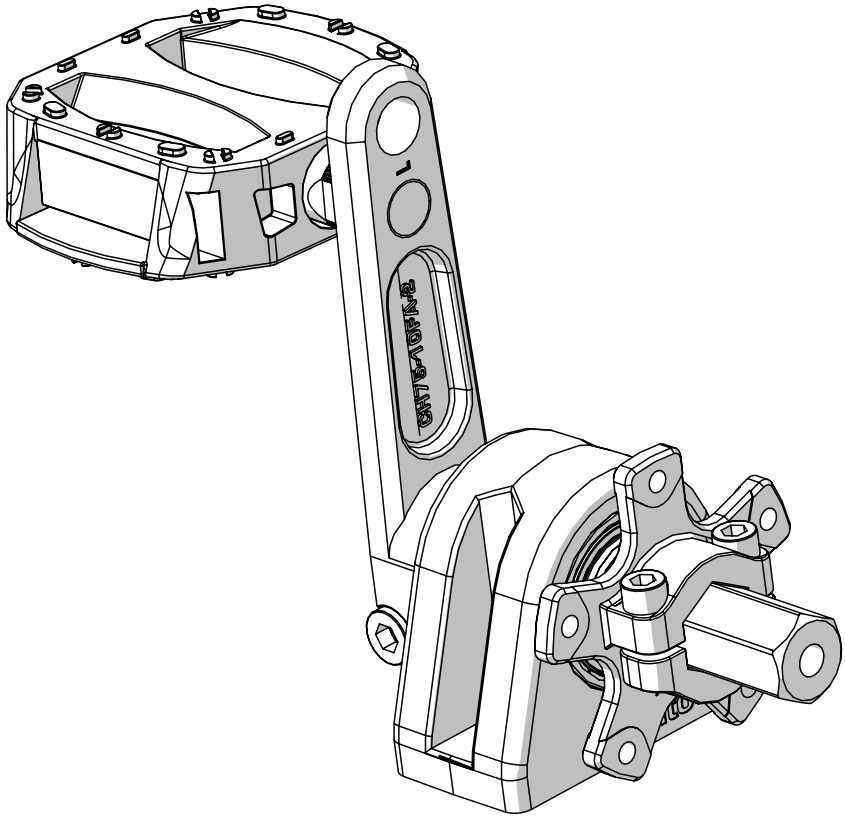

21

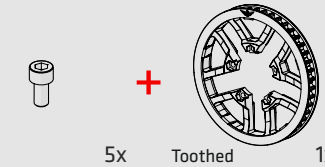

5x Bolt M6x12

\+

1x Toothed belt pulley 46T

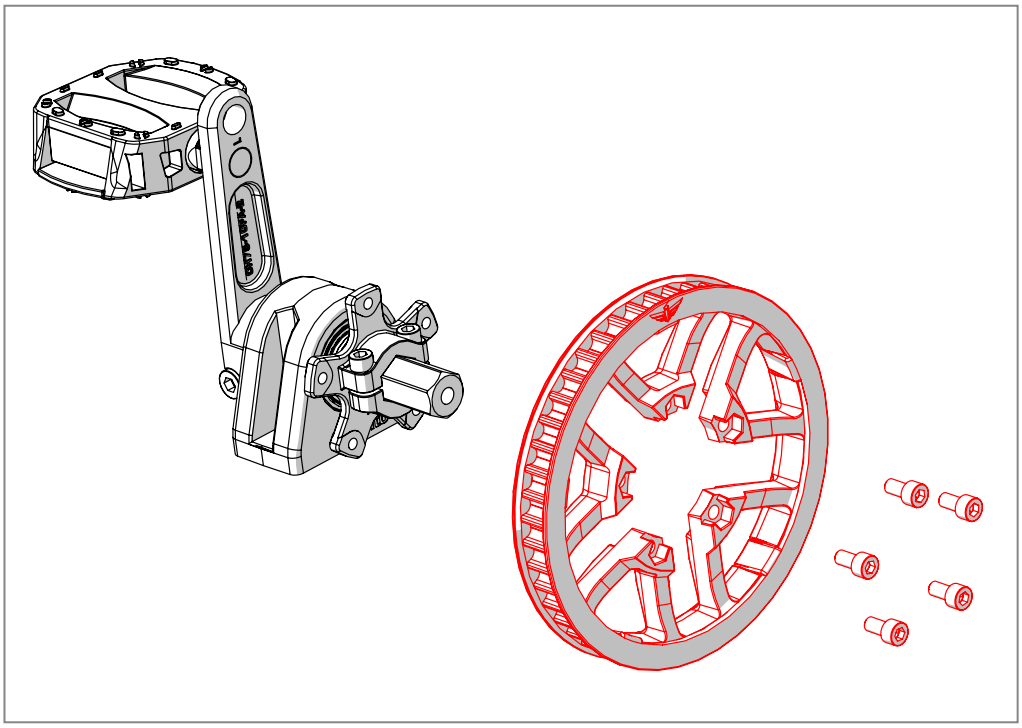

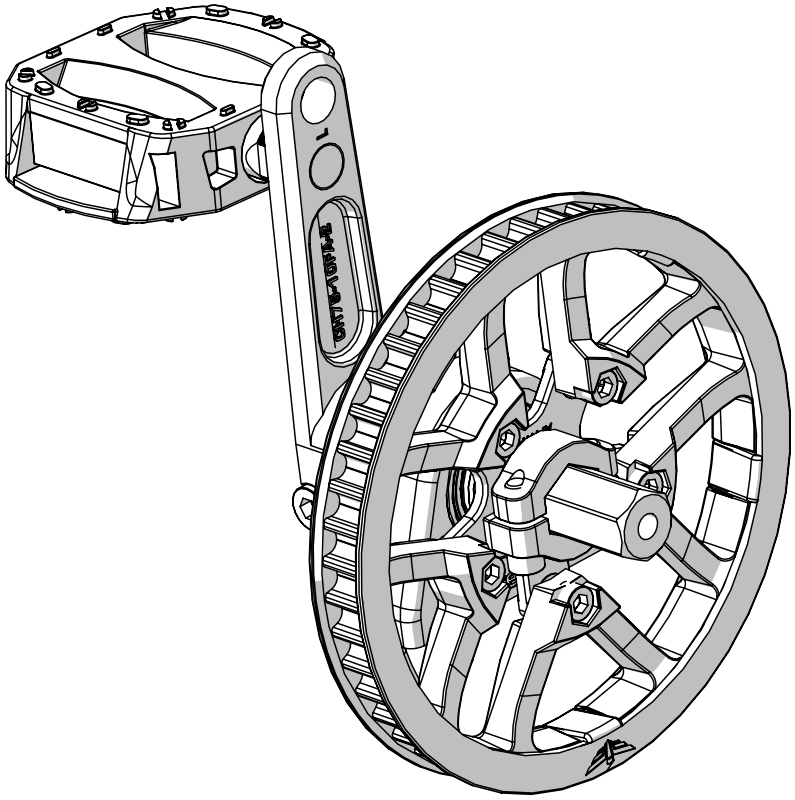

22

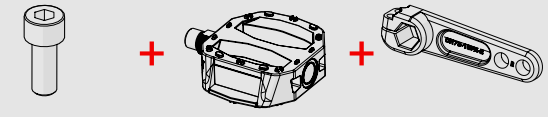

2x Bolt M8x20

1x Pedal right

1x Crank right

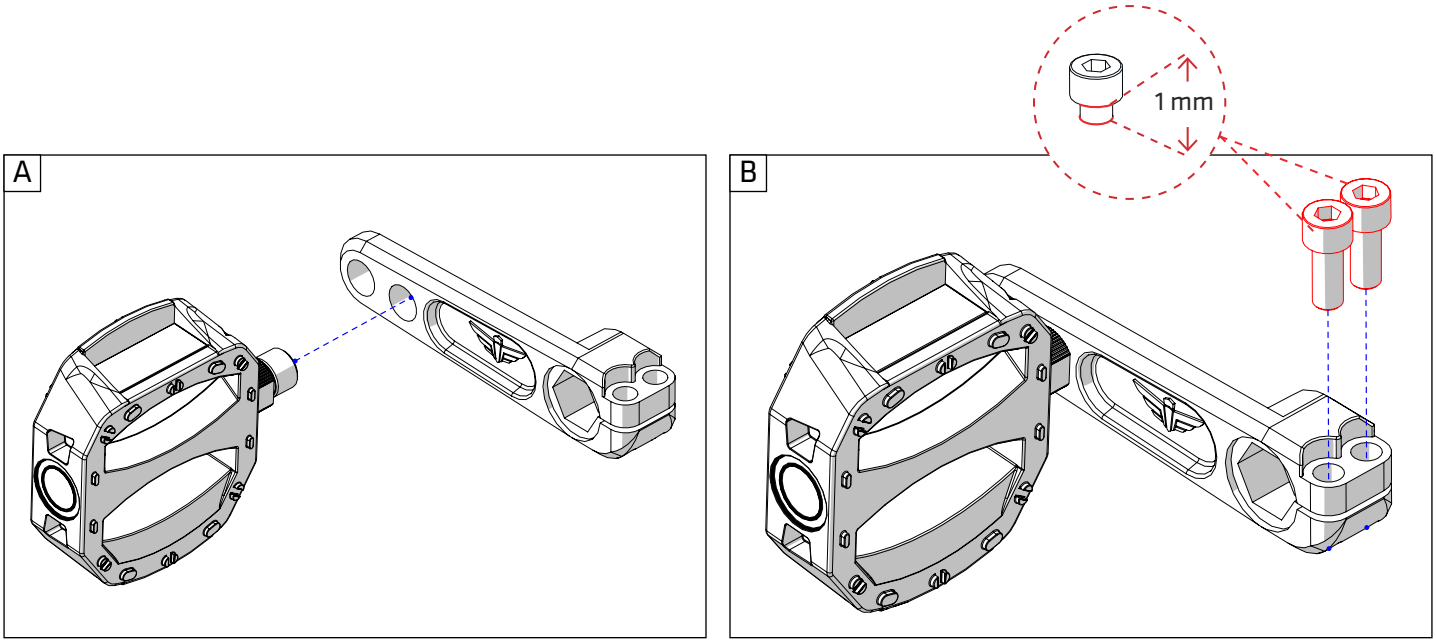

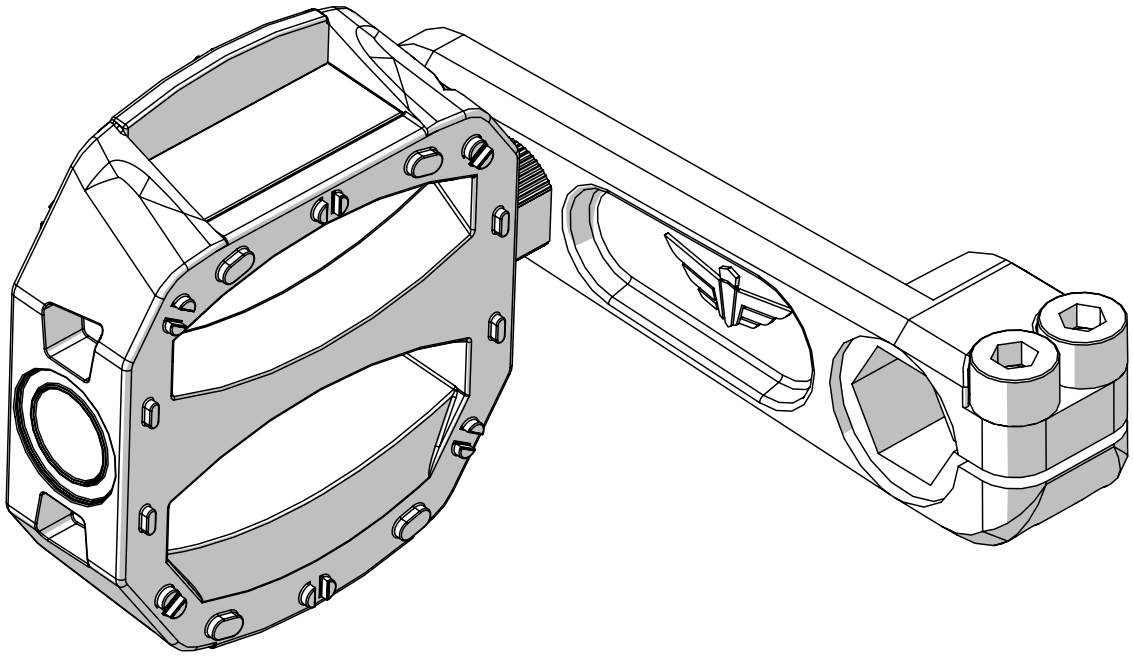

23

Spacer 1x
0.2 inch | 5 mm

Bolt M8x20 3x

Washer M8-24 1x

Axle 1x
4.8 inch | 122 mm

Pedal left 1x

Crank right 1x

A

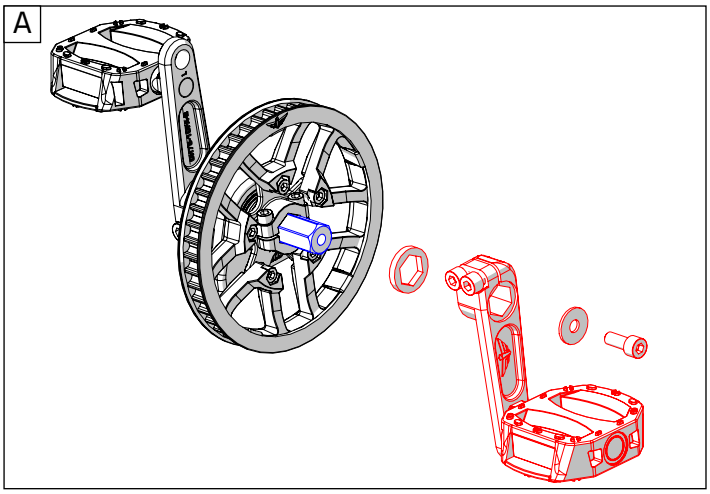

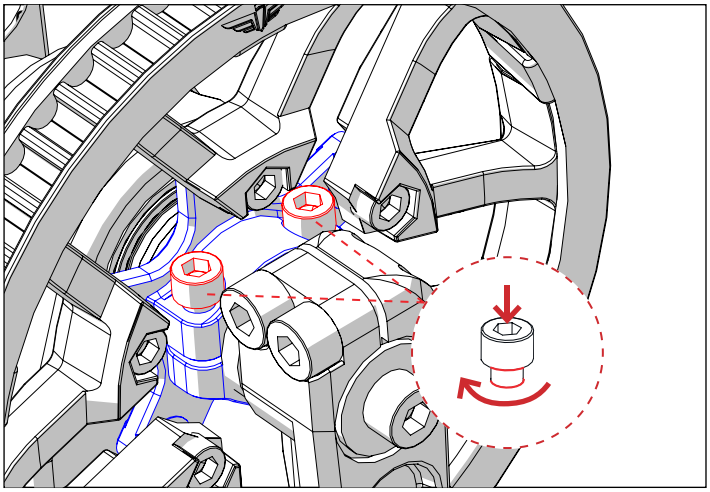

B

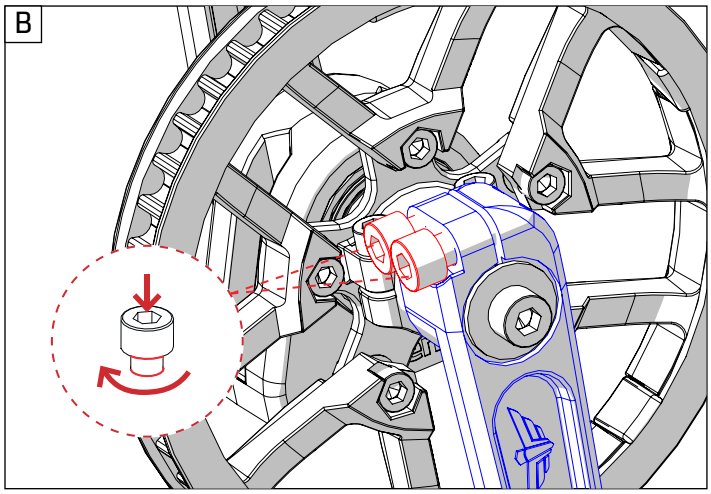

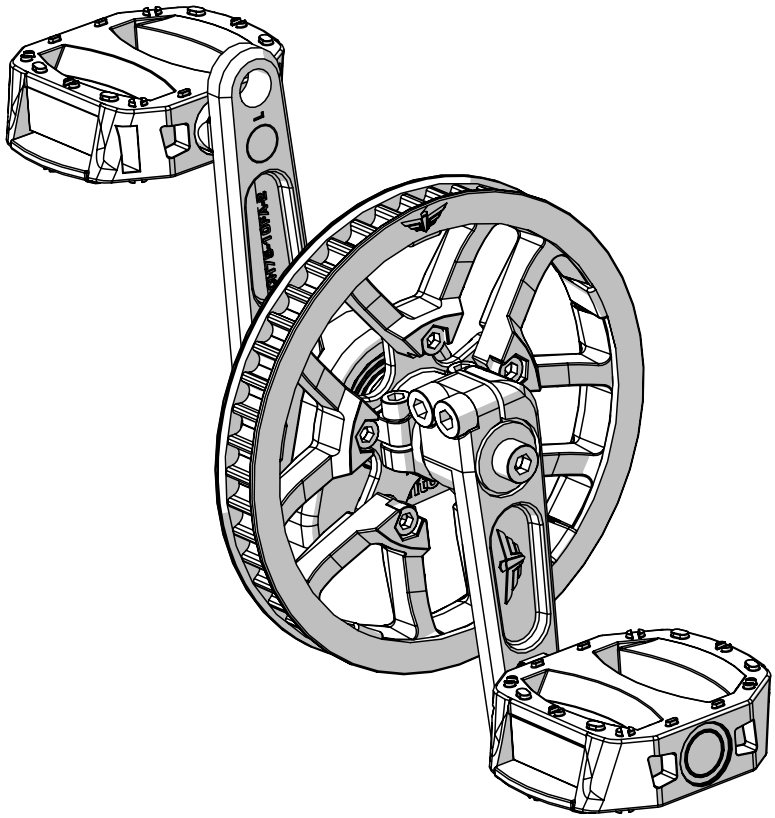

24

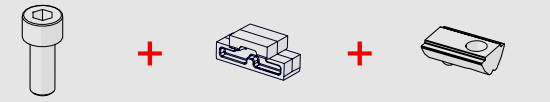

2x Bolt M8x20

2x T-Positioning block

2x Profile nut short

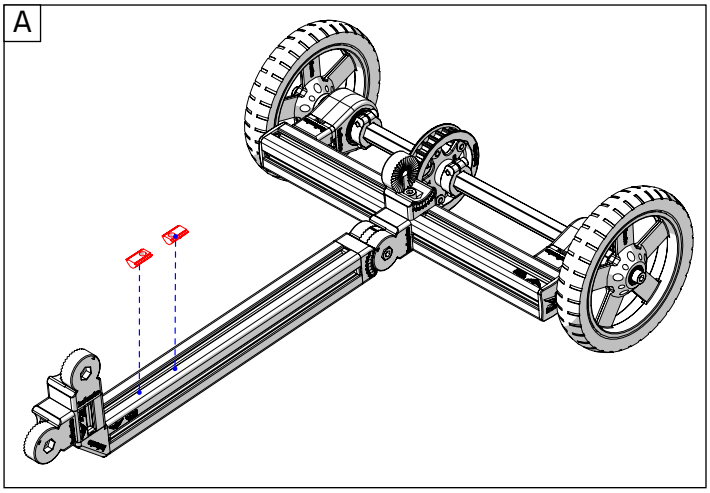

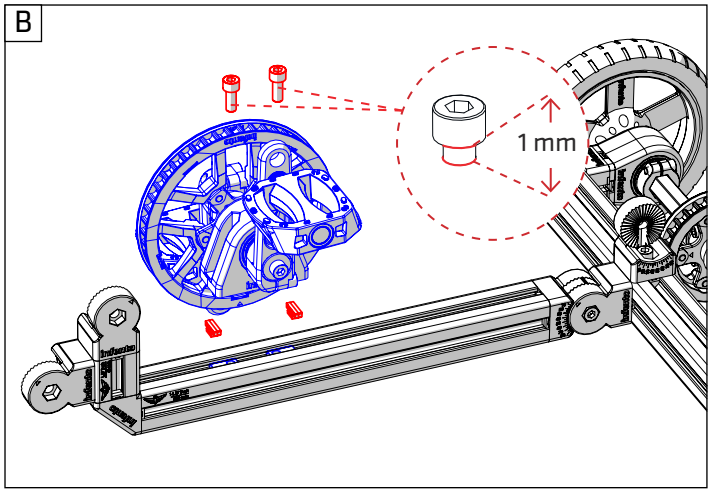

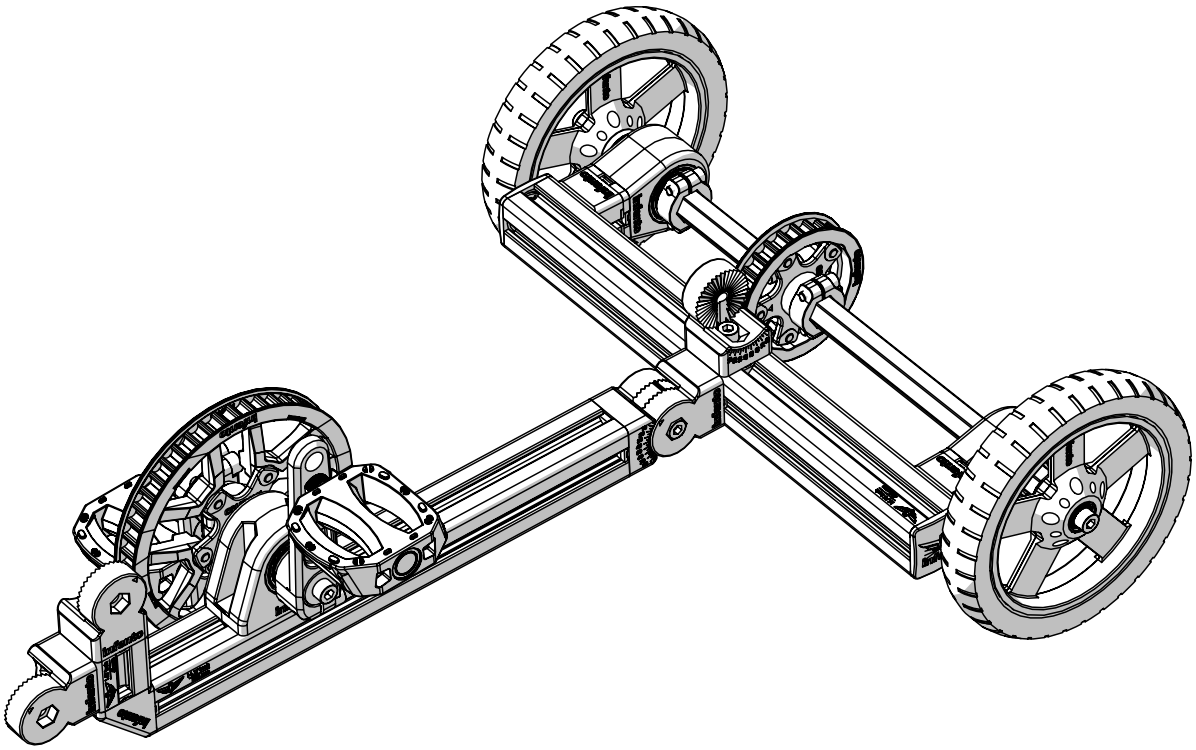

25

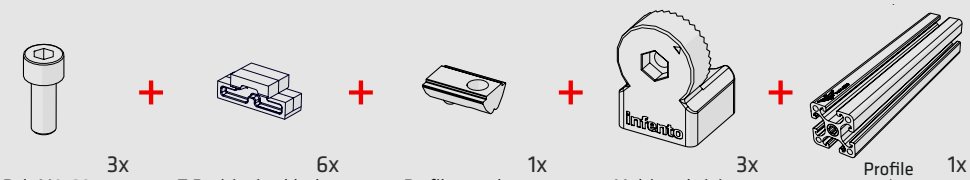

3x Bolt M8x20 + 6x T-Positioning block + 1x Profile nut short + 3x Multi angle joint + Profile 1x 11.02 inch | 280 mm

A

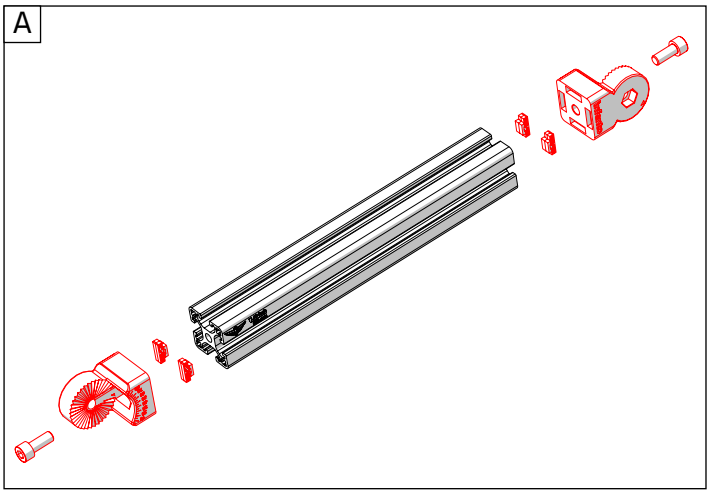

B

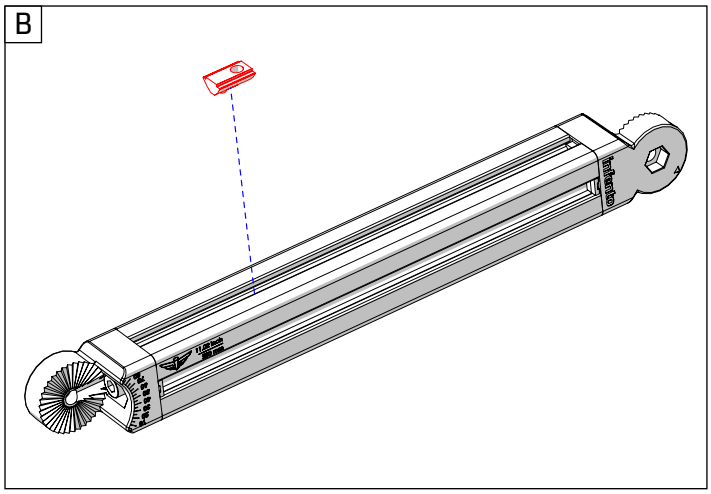

C

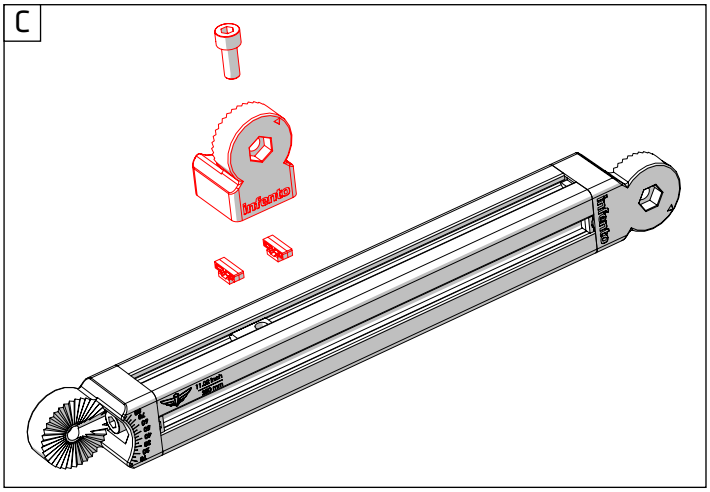

D

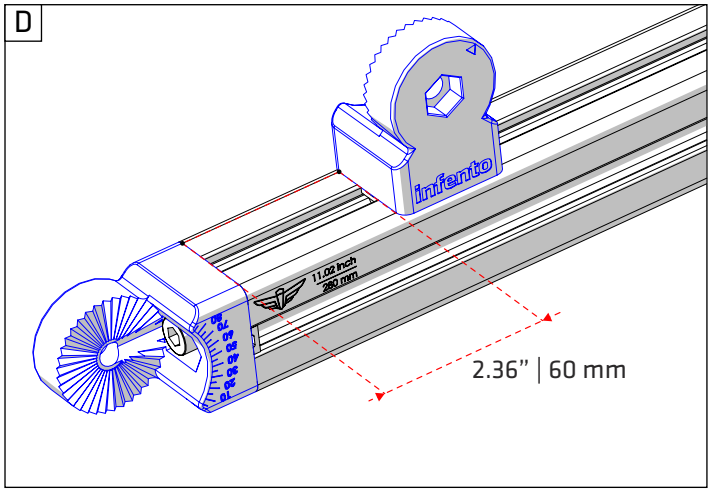

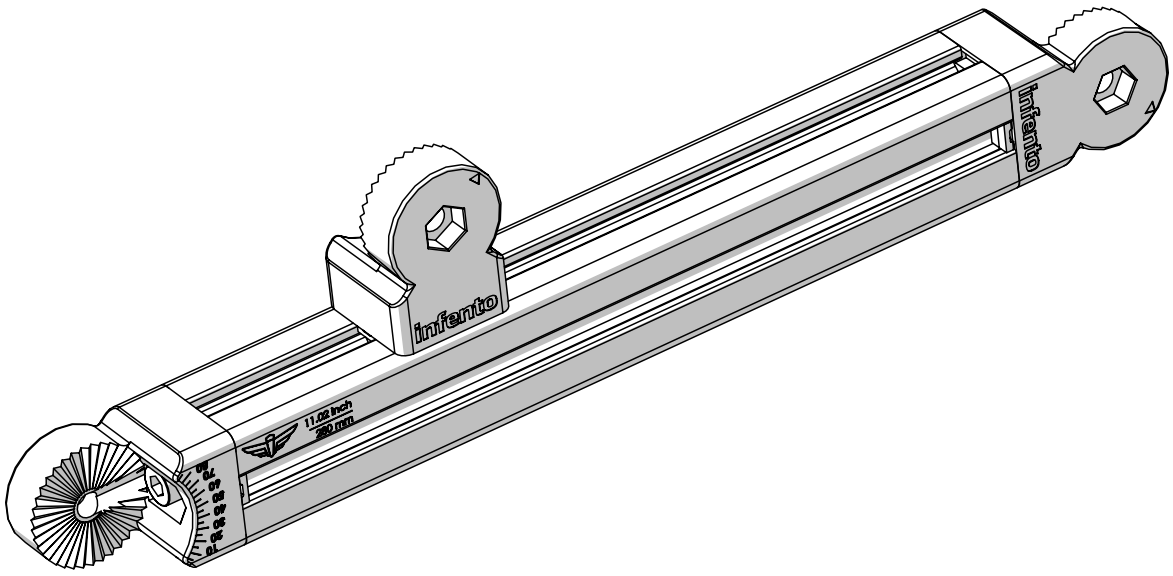

26

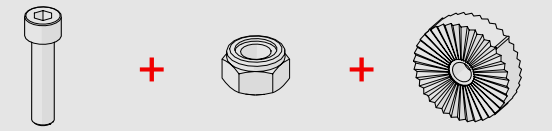

1x Bolt M8x35

1x Locknut M8

1x Knurled disc 1 stripe

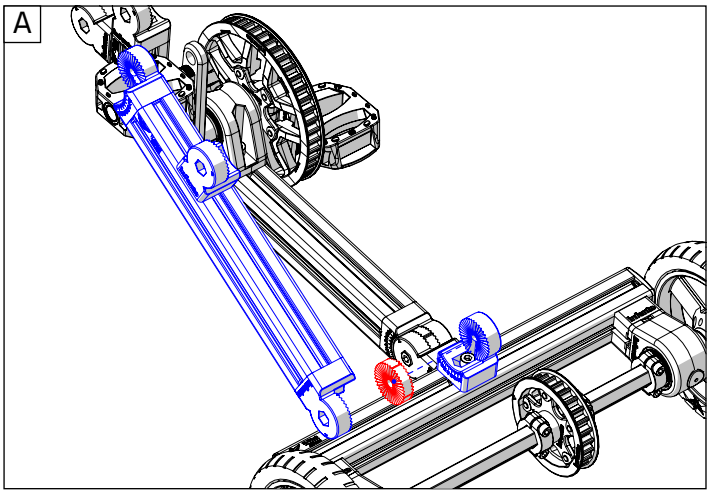

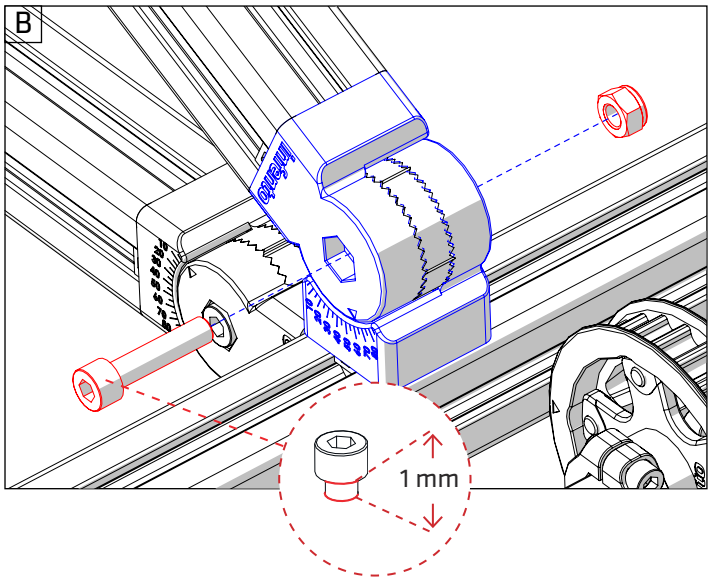

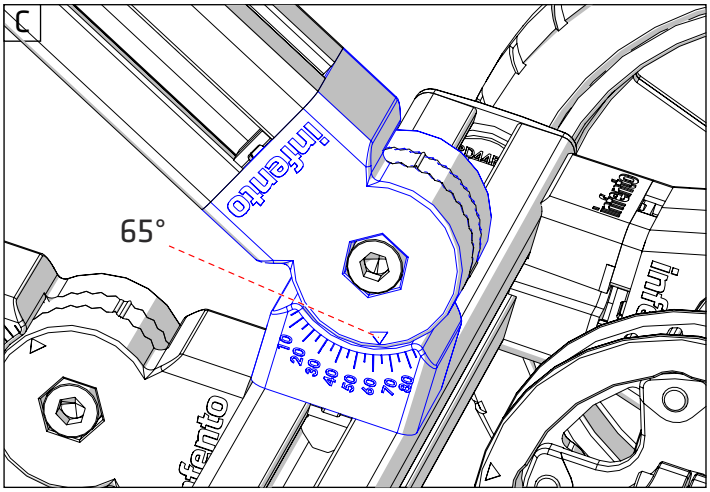

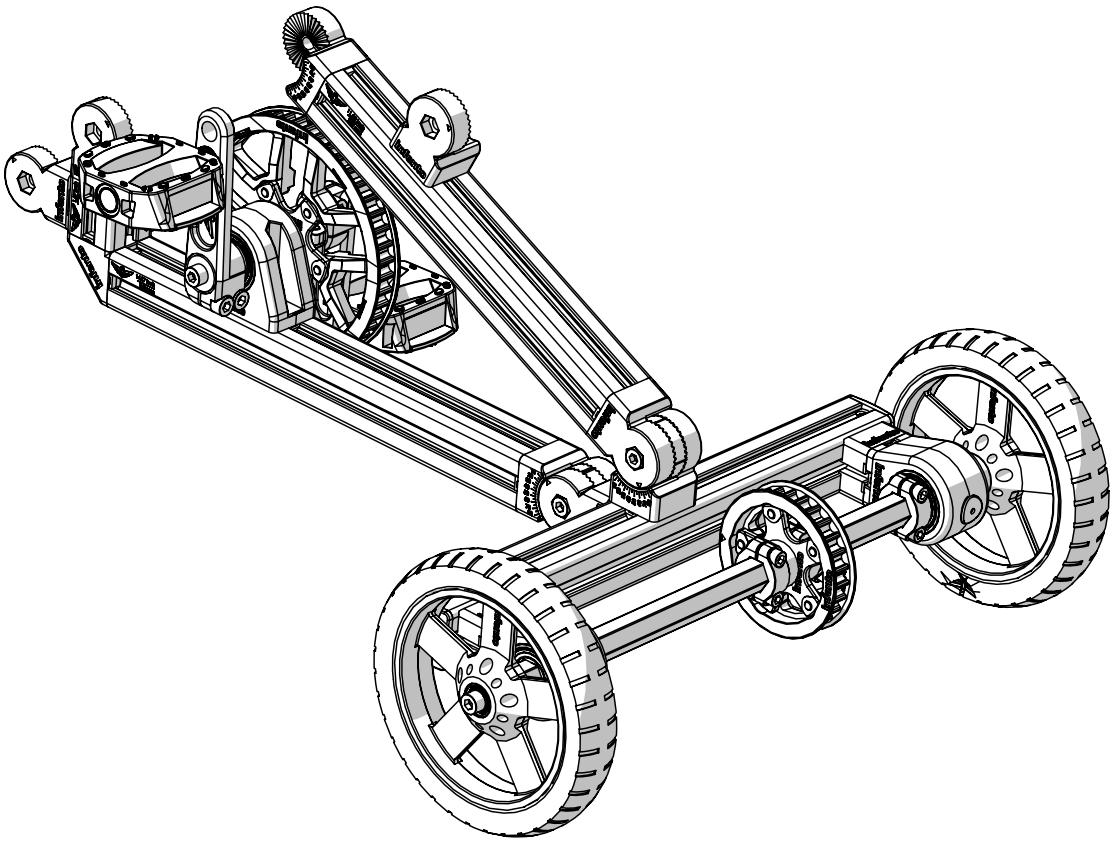

27

Belt shield centre 26T 2x

Toothed belt 118T 1x

A

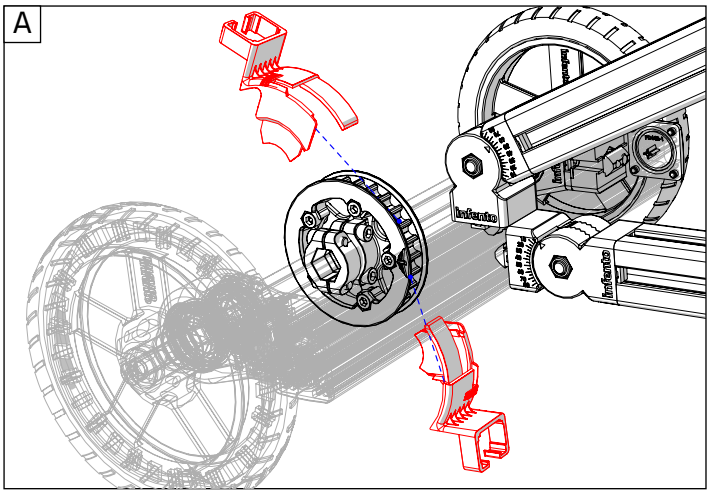

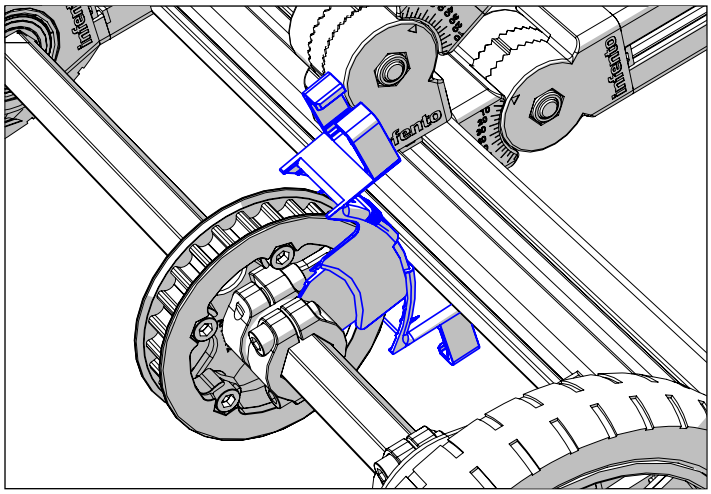

C

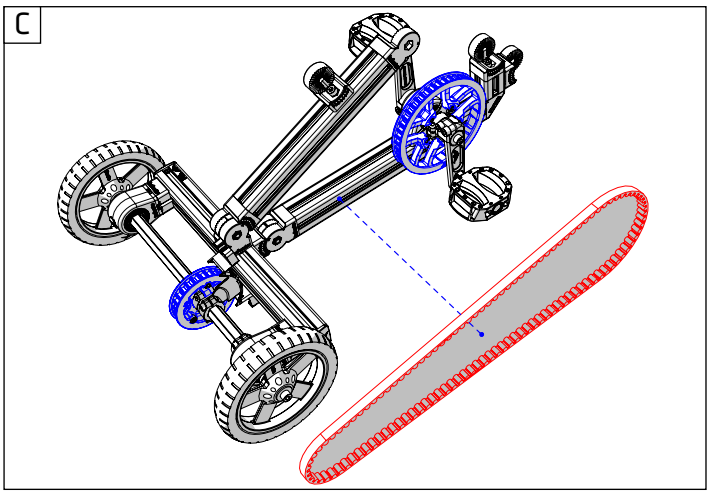

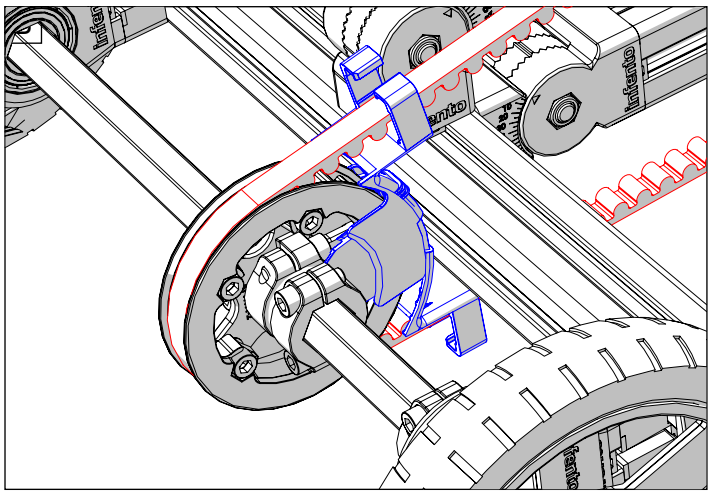

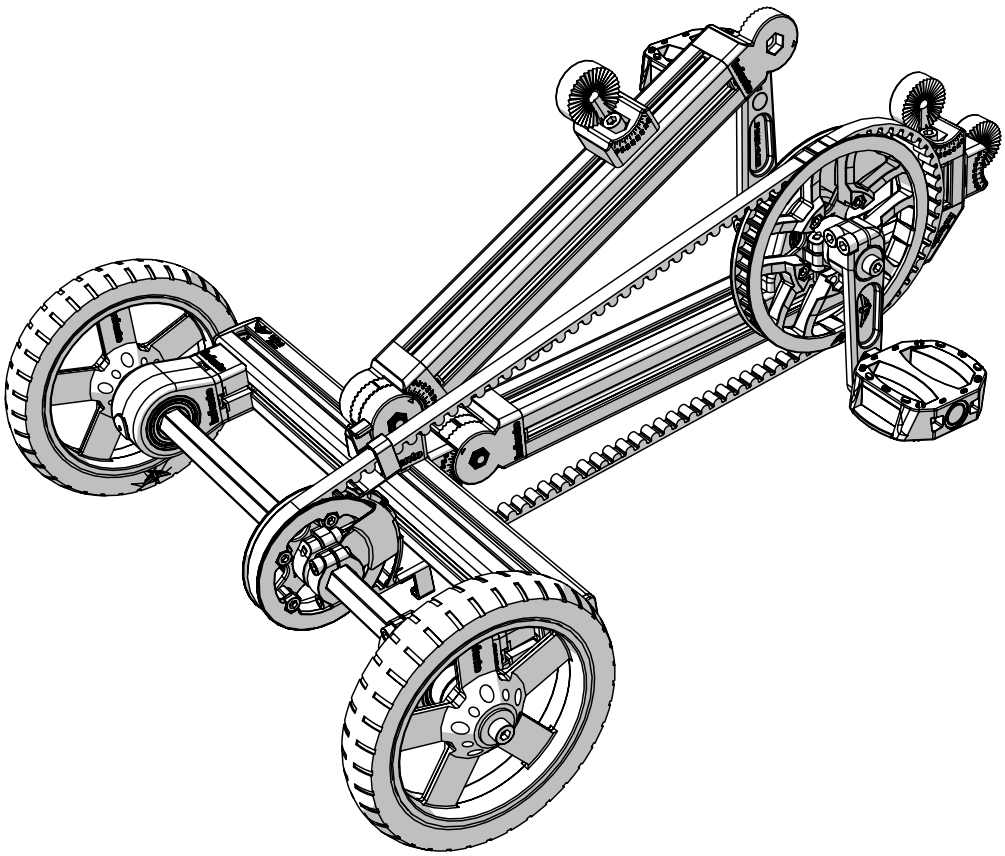

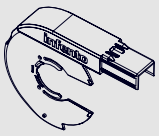

Belt shield cap 26T 2x

A

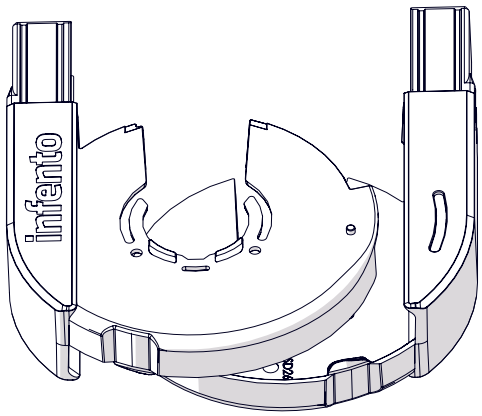

B

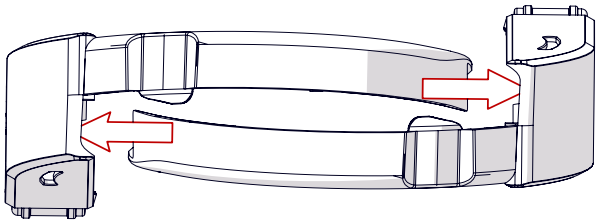

C

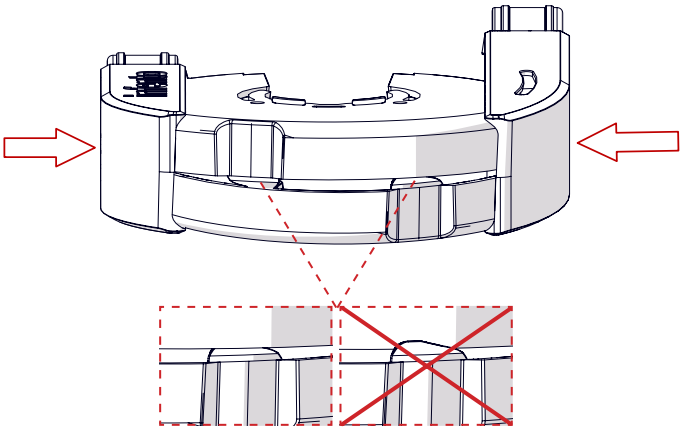

D

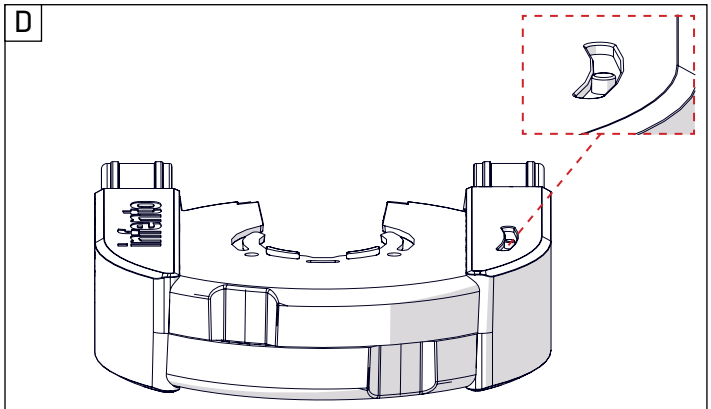

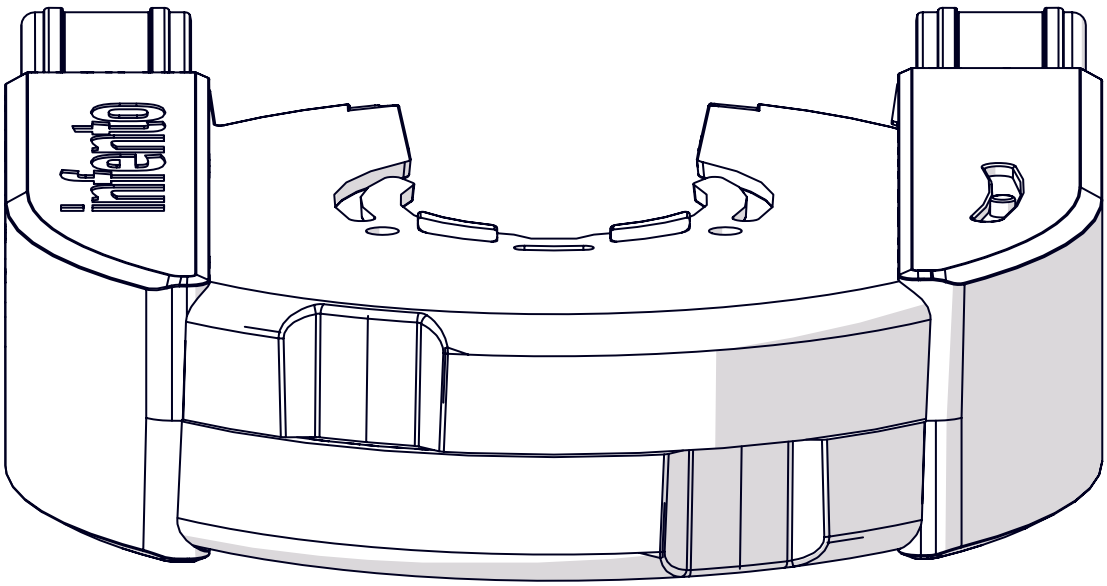

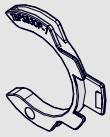

Belt shield nylon ring 2x

A

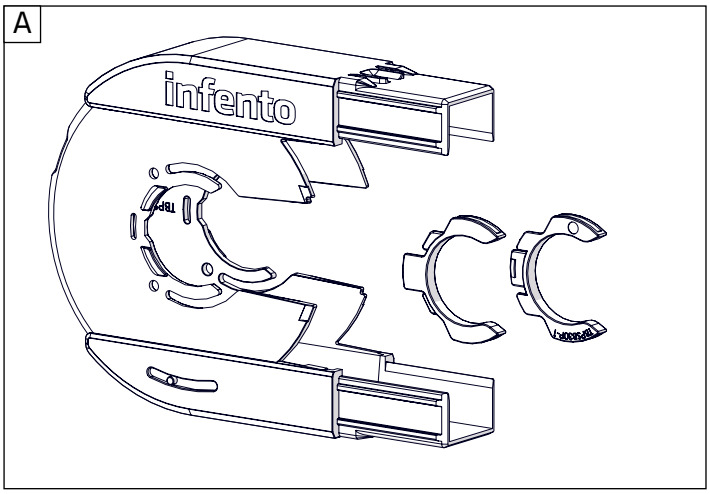

B

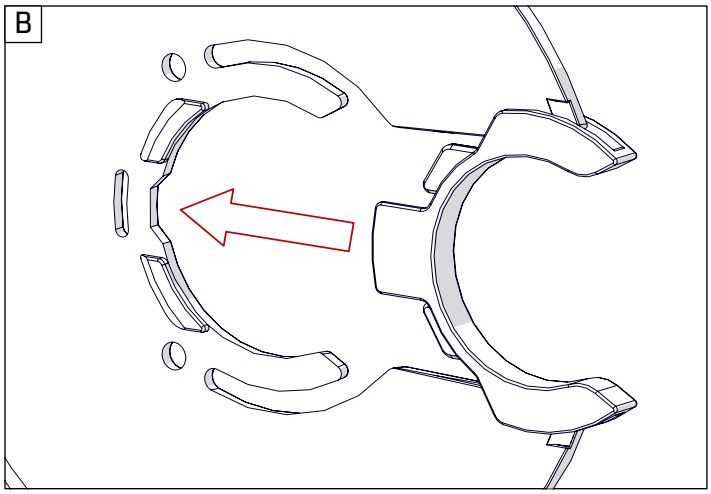

C

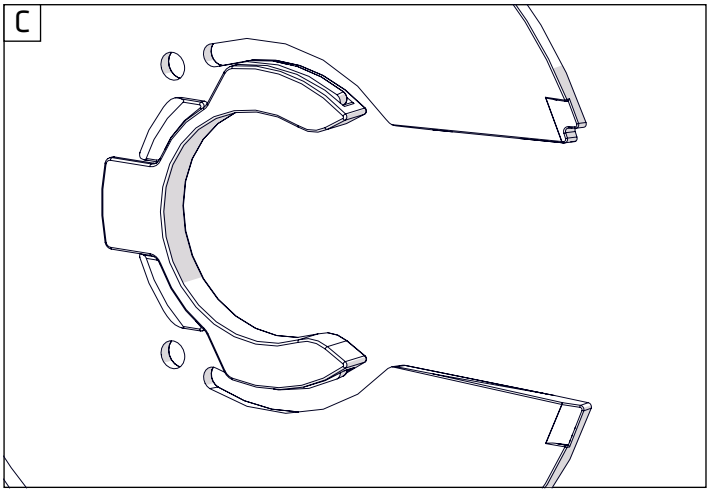

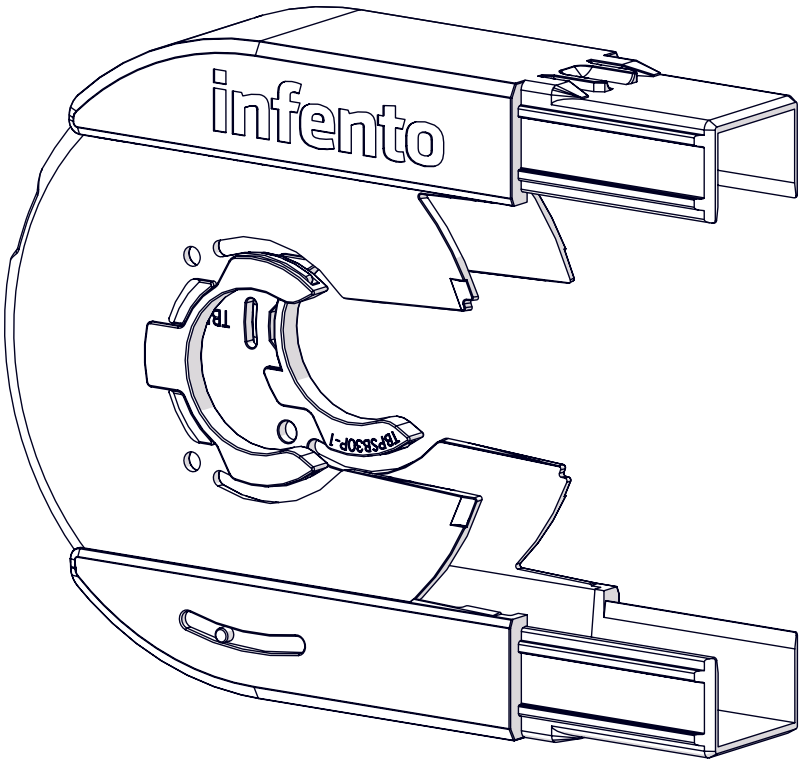

A

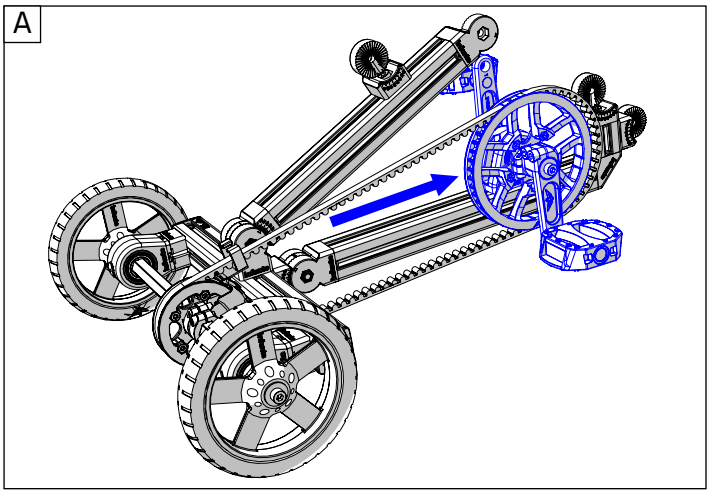

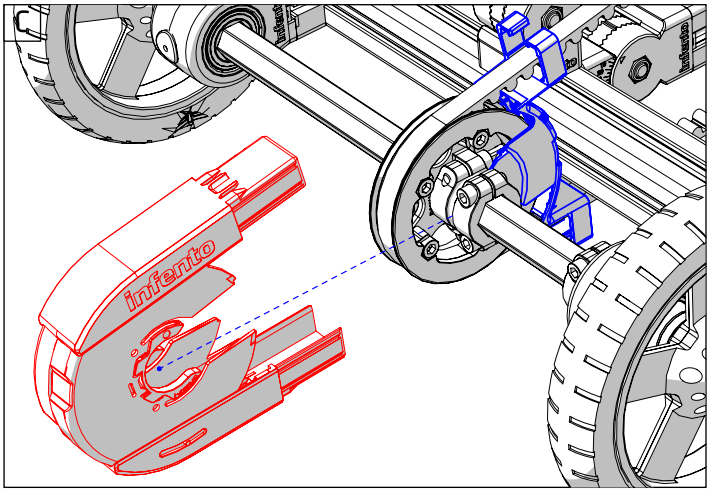
infento

B

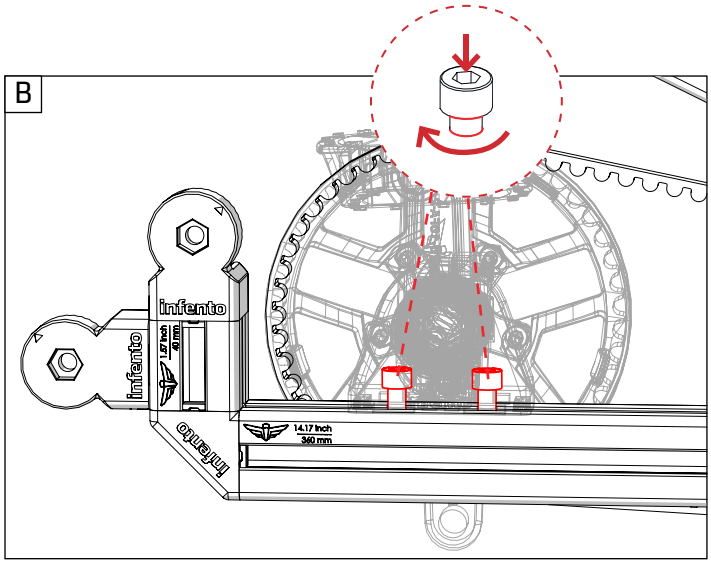
infento
infento
1.57 Inch
40 mm
infento
14.17 Inch
360 mm

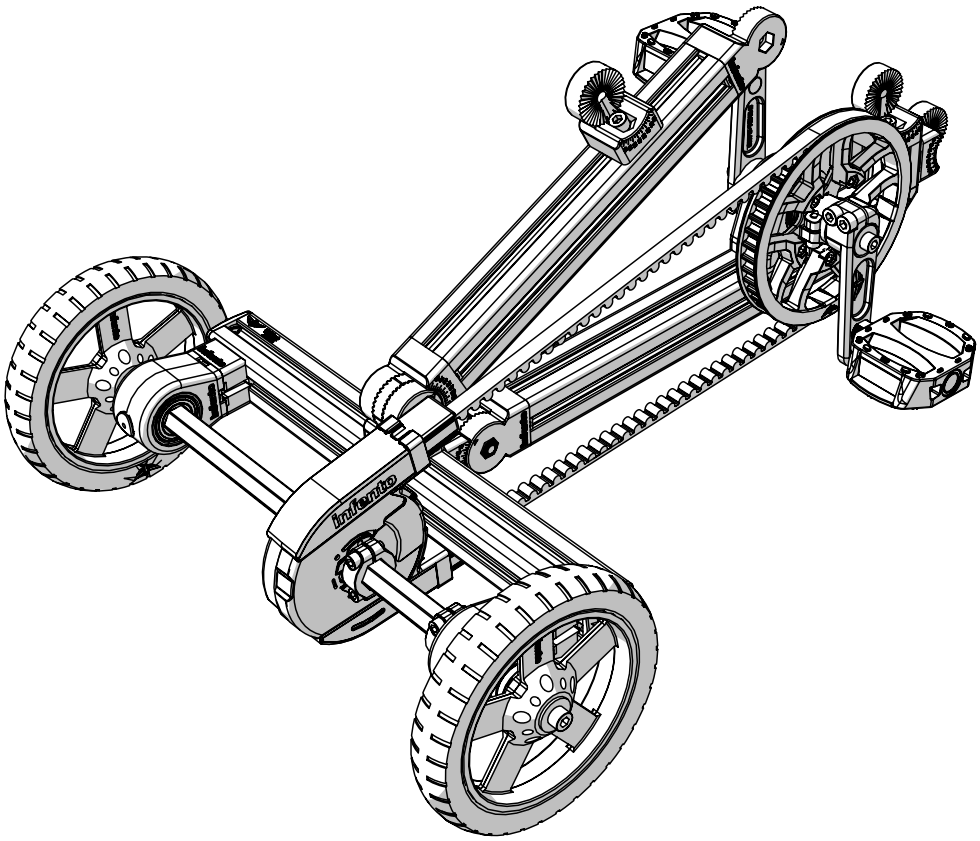
infento

31

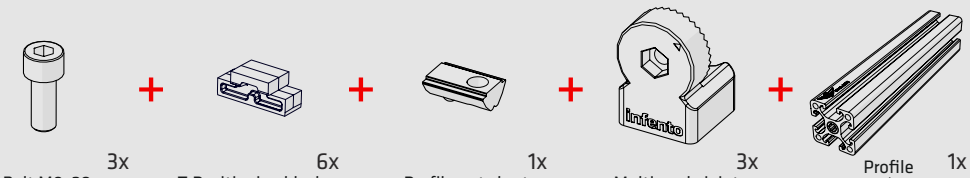

3x Bolt M8x20 + 6x T-Positioning block + 1x Profile nut short + 3x Multi angle joint + 1x Profile 4.72 inch | 120 mm

A

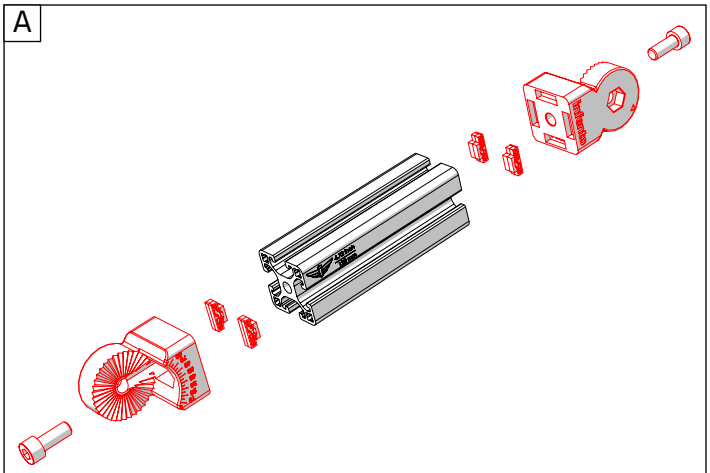

B

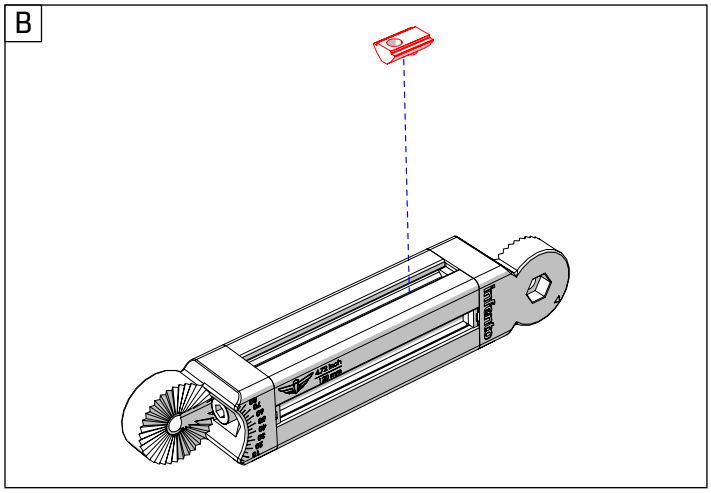

C

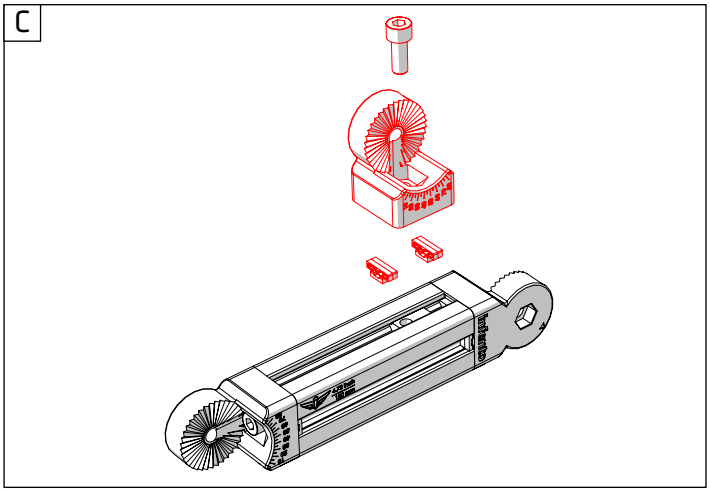

D

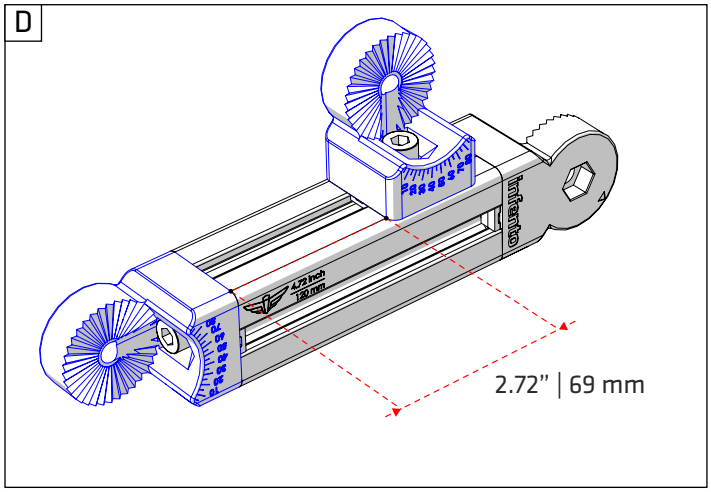

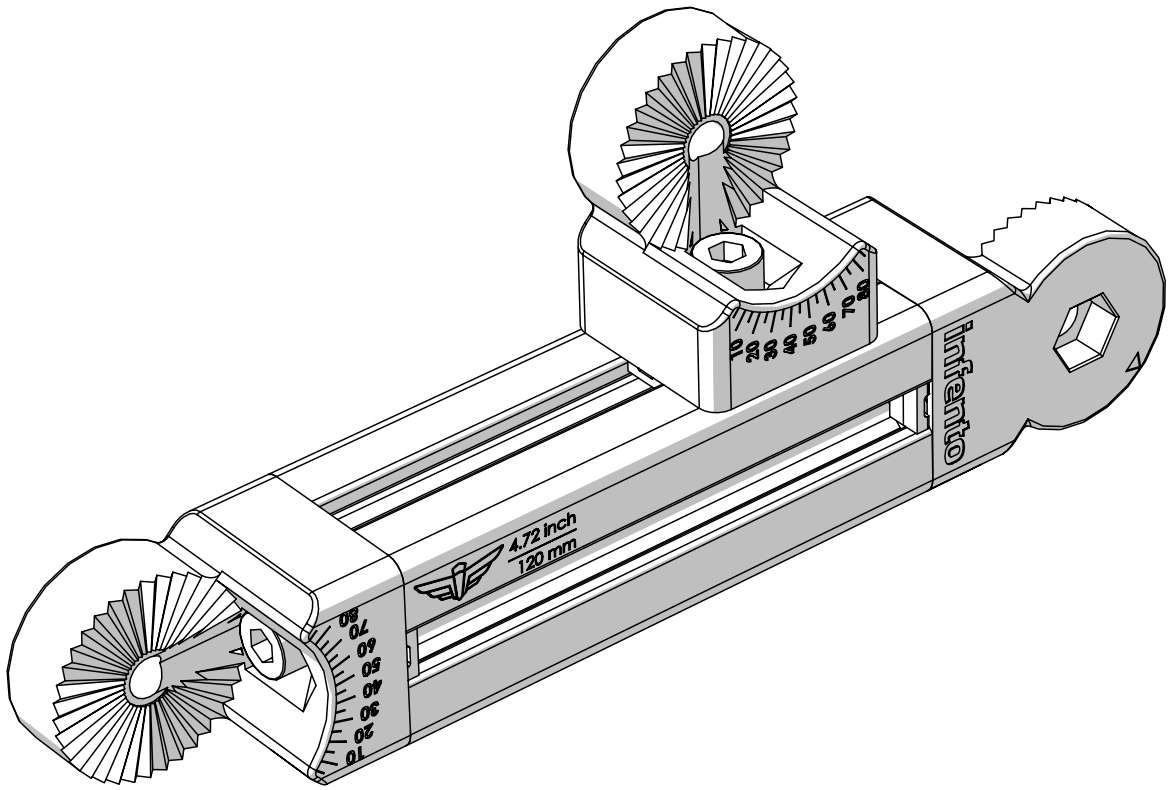

32

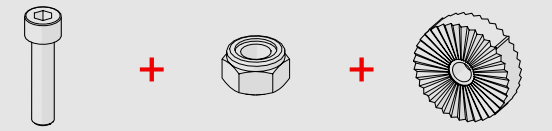

2x Bolt M8x35 + 2x Locknut M8 + 2x Knurled disc 1 stripe

A

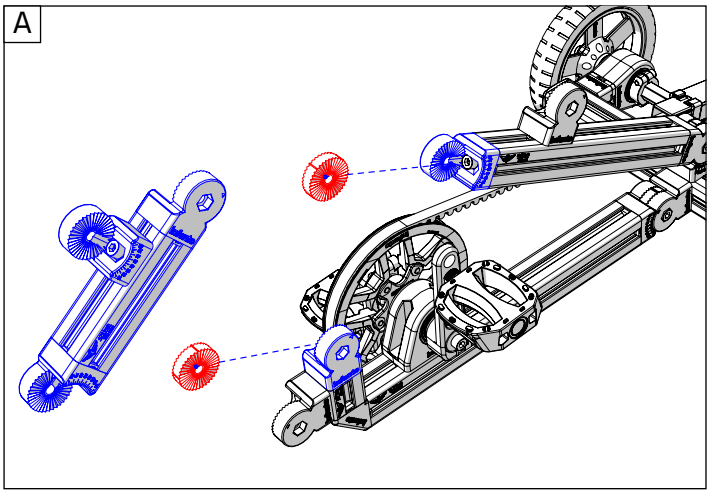

B

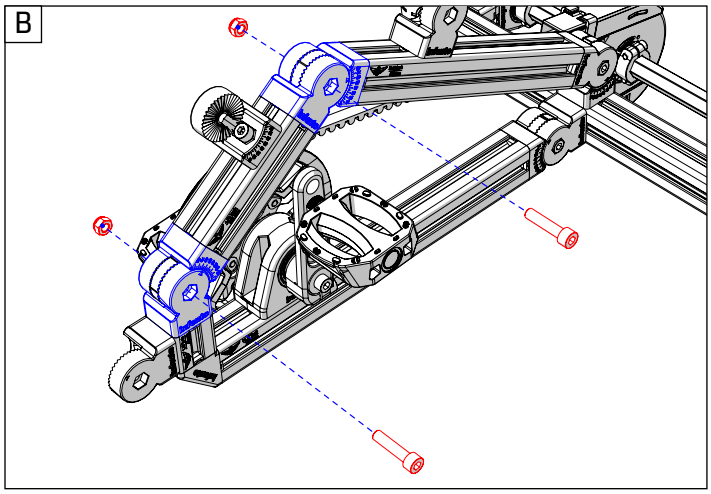

C

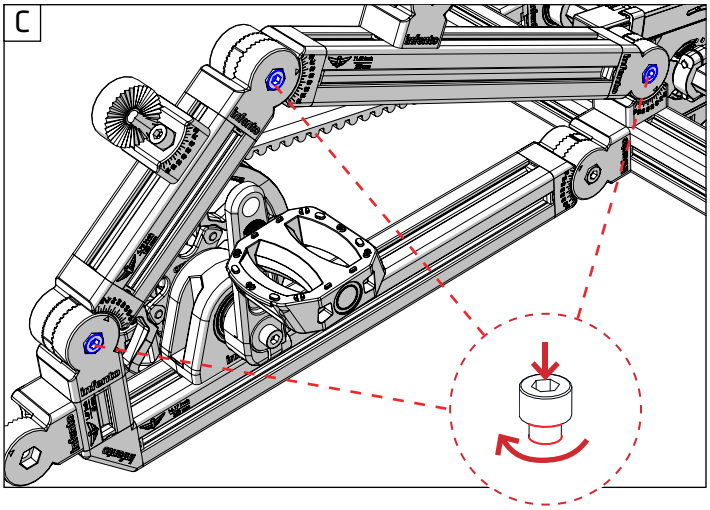

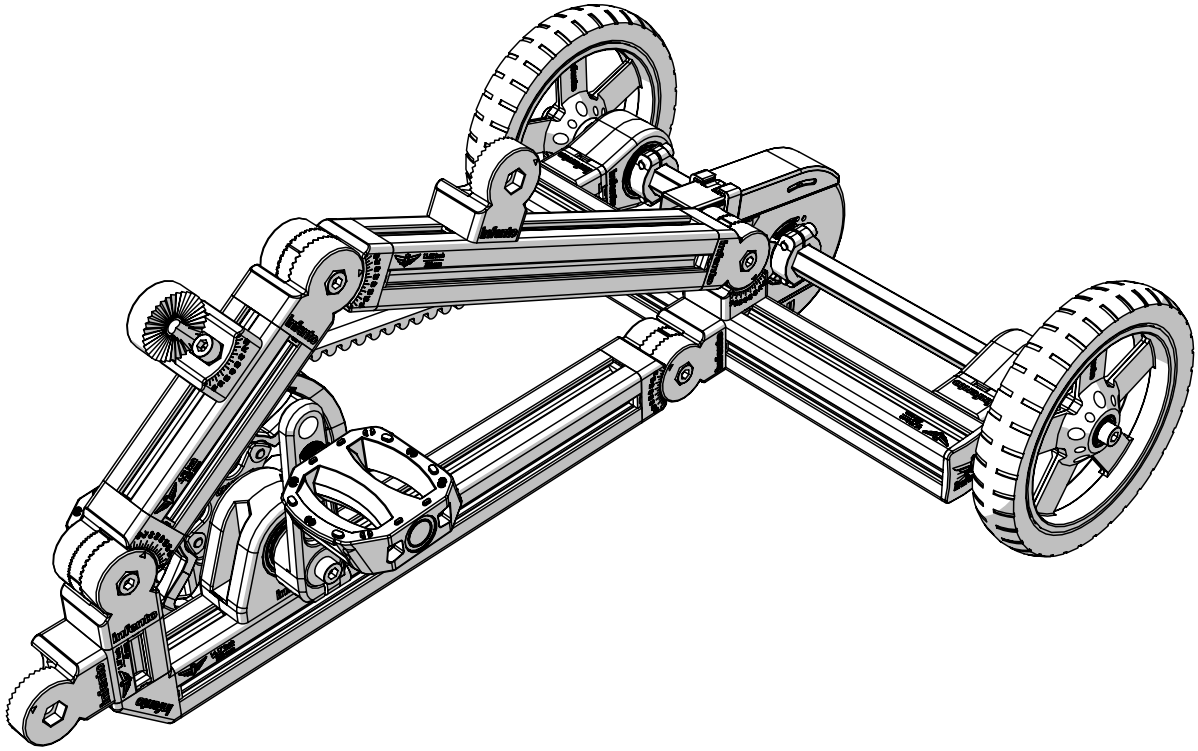

Bolt M8x20 (low head) 3x

+

T-Positioning block 6x

+

Profile nut short 2x

+

L-joint 3x

+

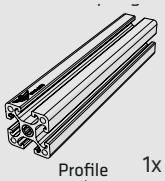

Profile 3.15 inch | 80 mm 1x

A

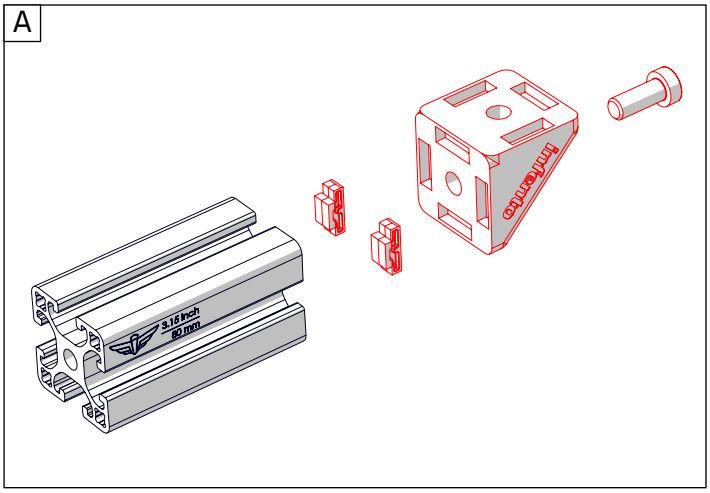

B

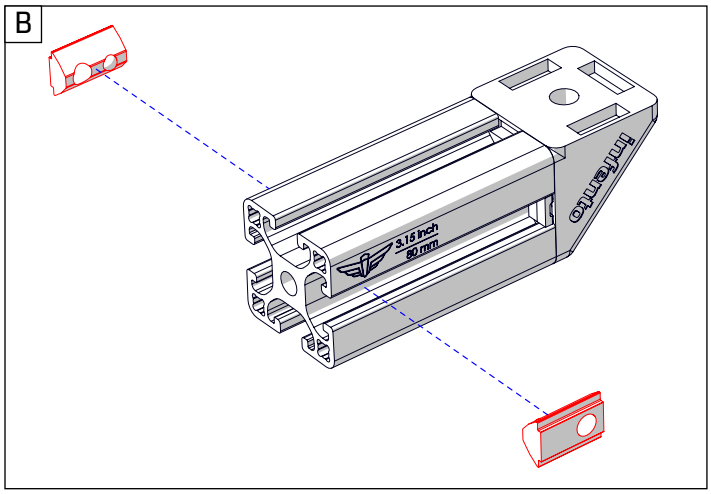

C

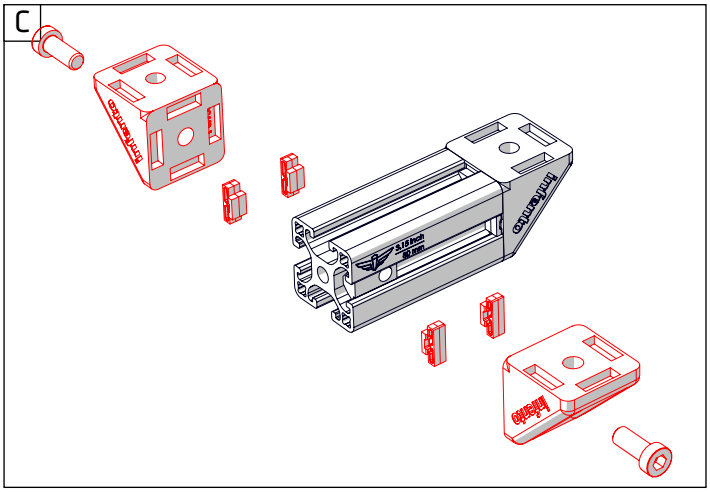

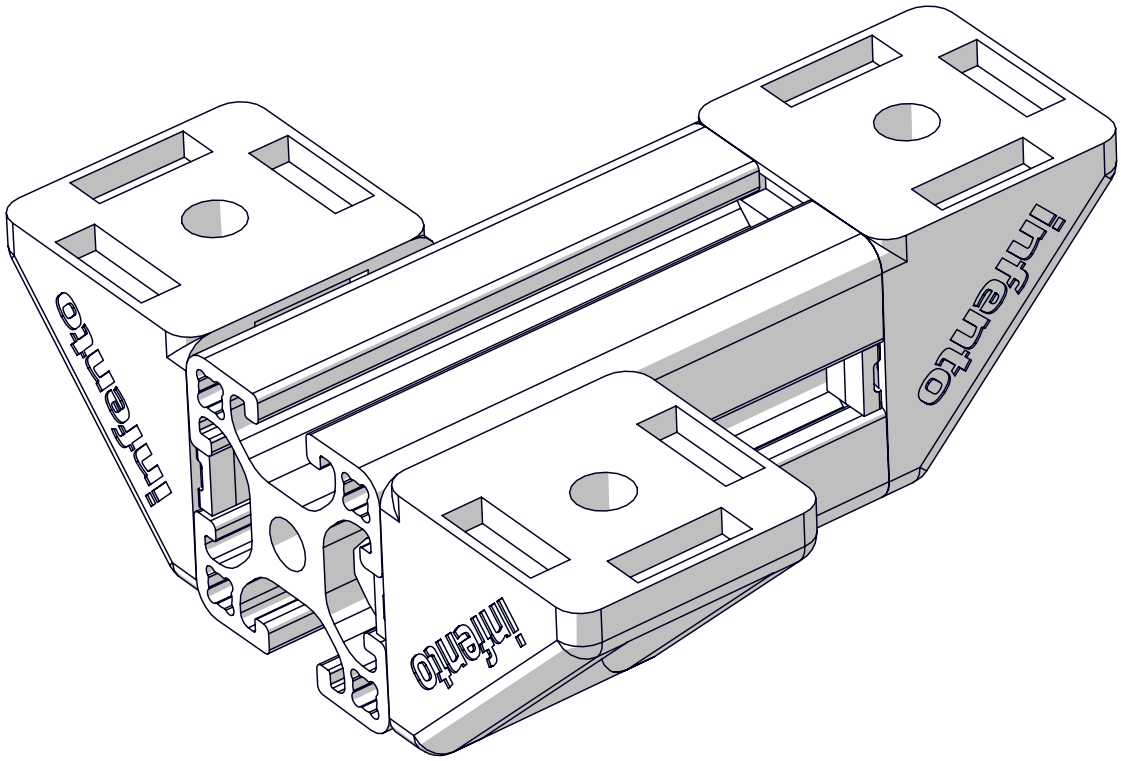

34

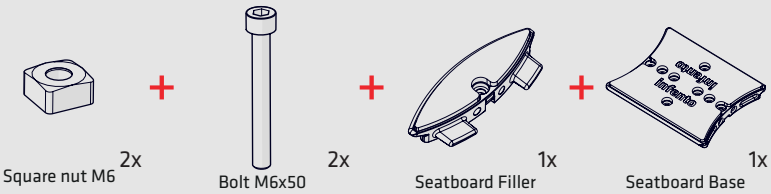

If you have this type of seat in your Kit, please skip to the next page. If not, follow the instructions below to construct your seatboard.

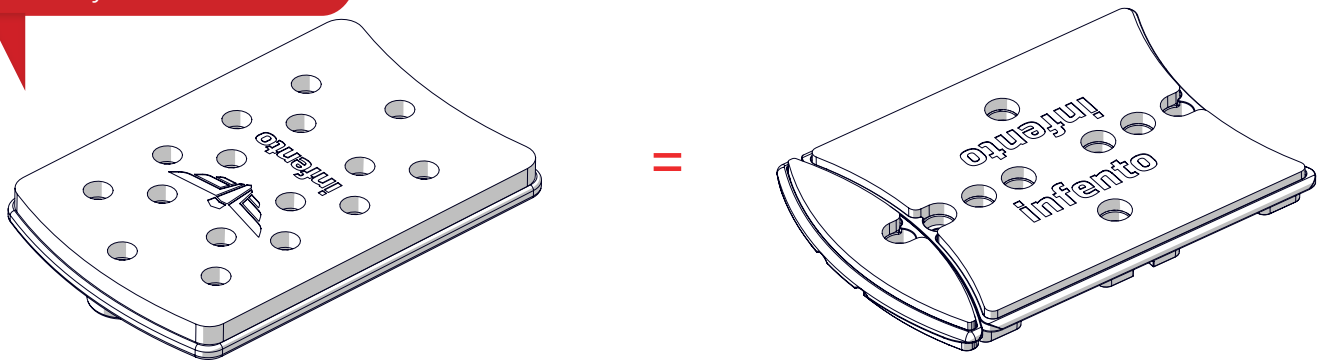

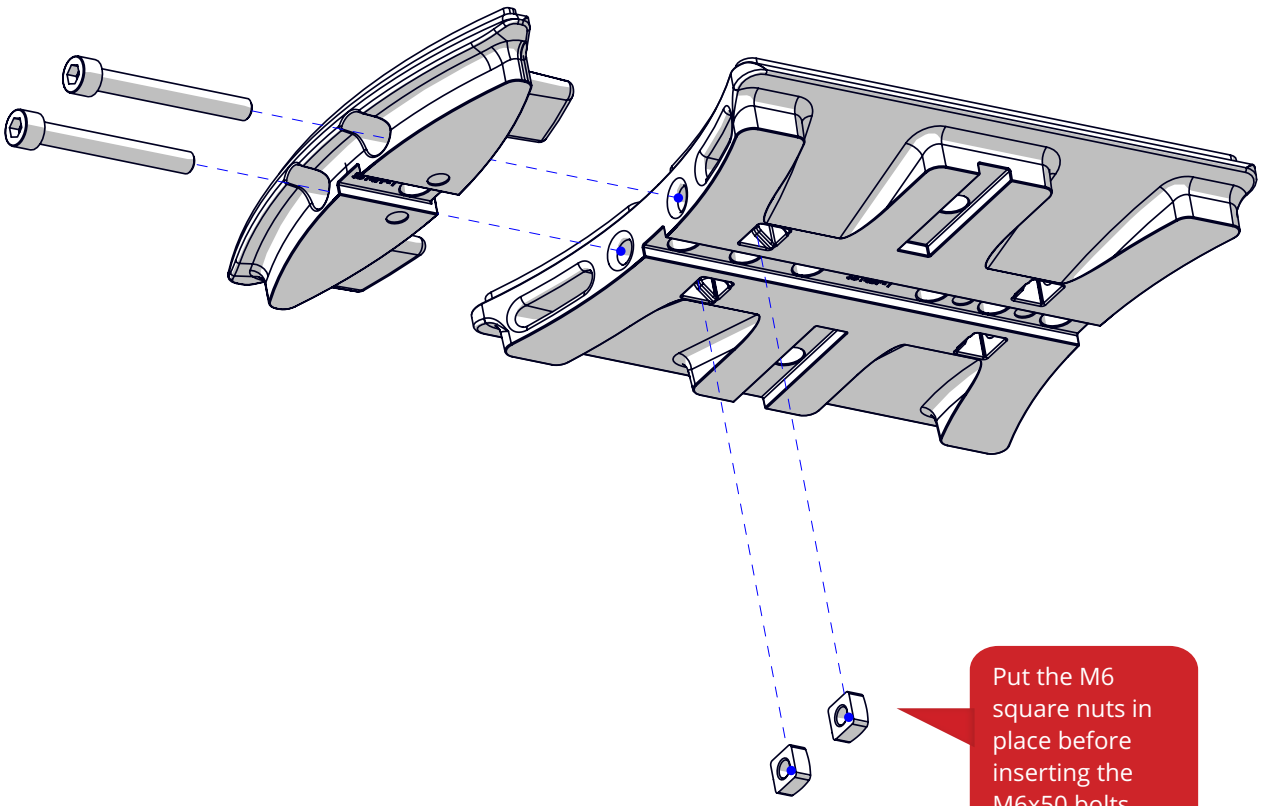

Put the M6 square nuts in place before inserting the M6x50 bolts.

35

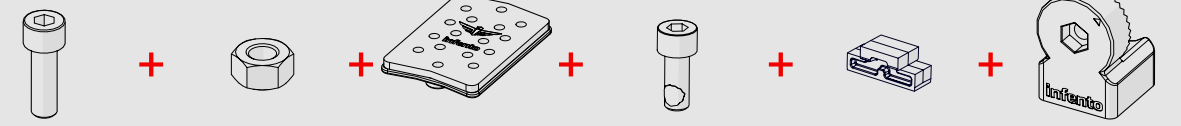

2x Bolt M8x25

2x Nut M8

1x Ducktail board extension + foam

1x Bolt M8x20 nylock

2x T-Positioning block

1x Multi angle joint

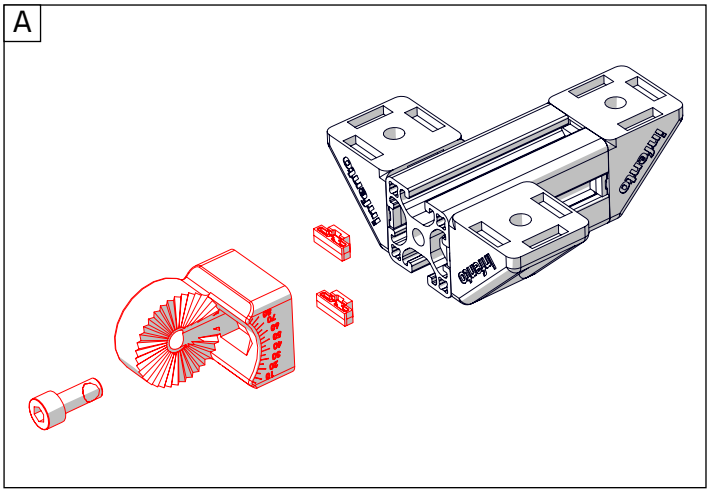

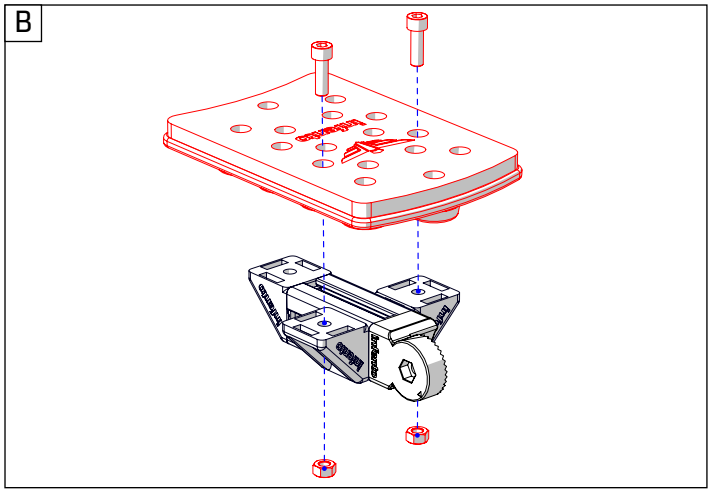

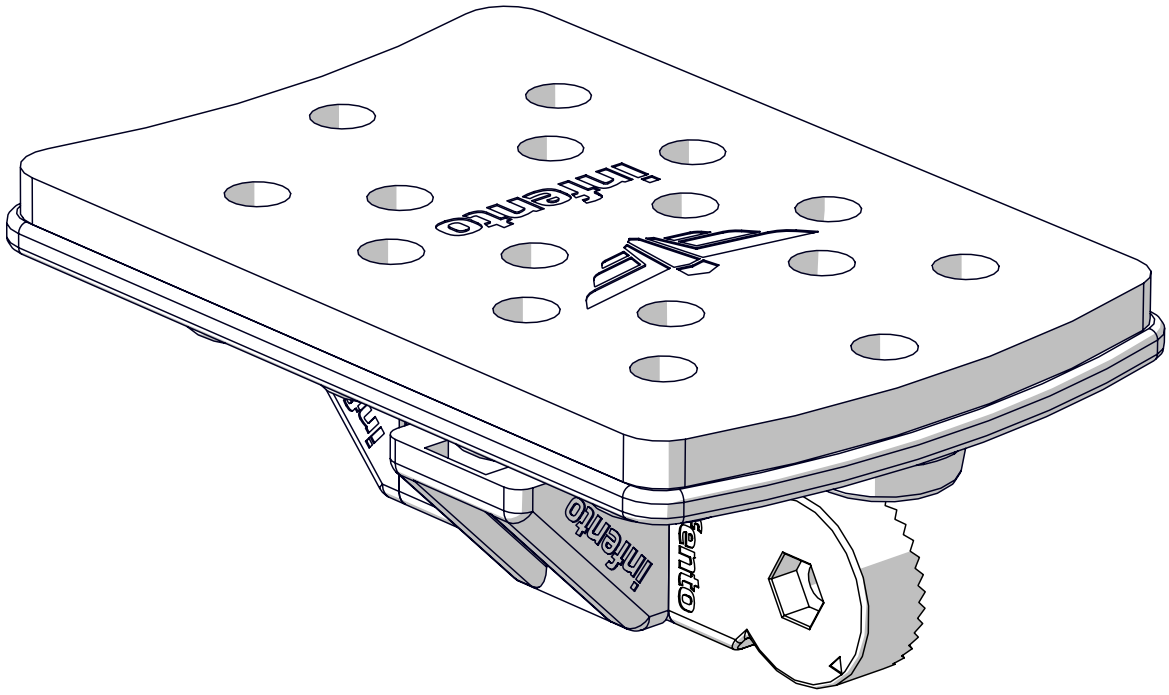

36

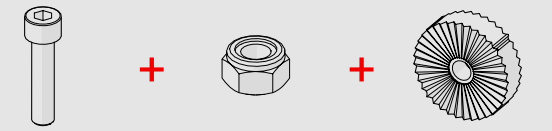

1x Bolt M8x35

1x Locknut M8

1x Knurled disc 2 stripes

A

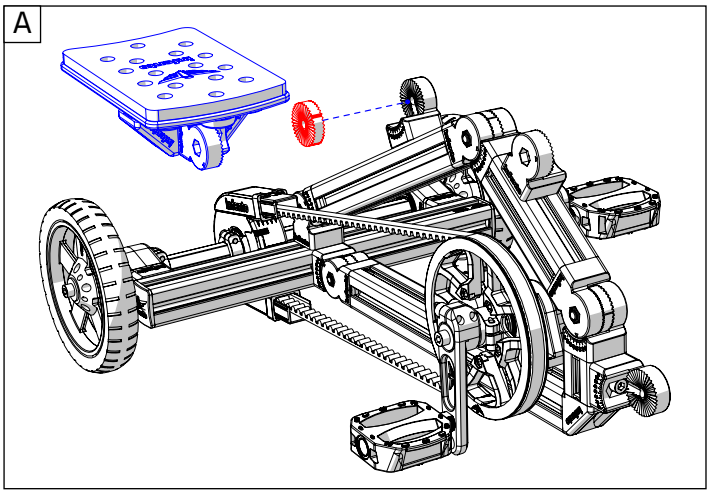

B

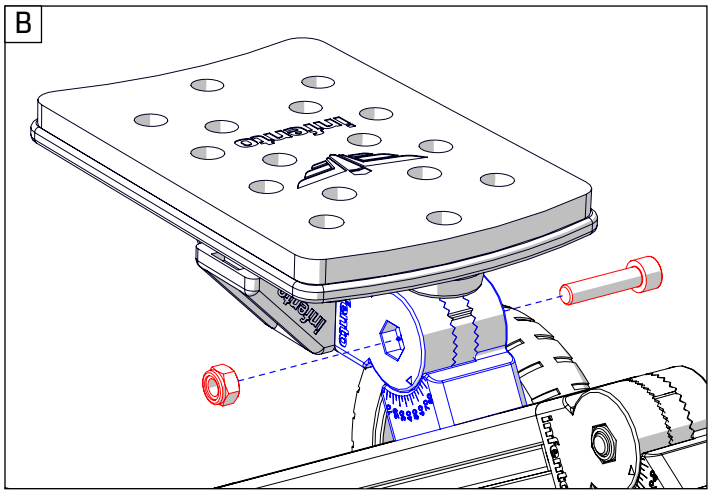

C

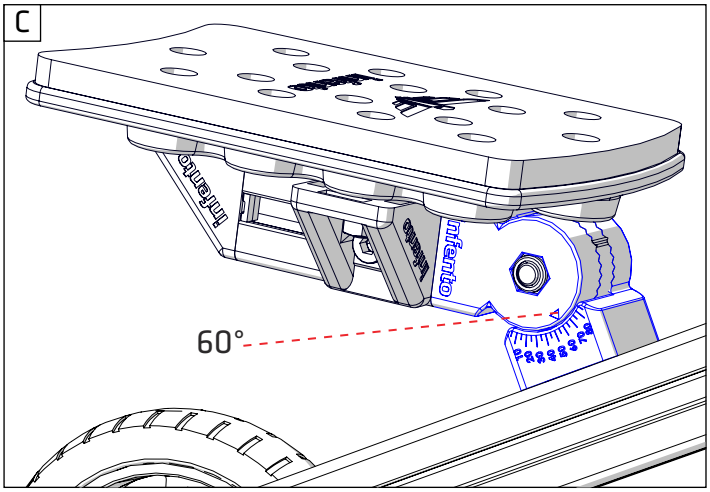

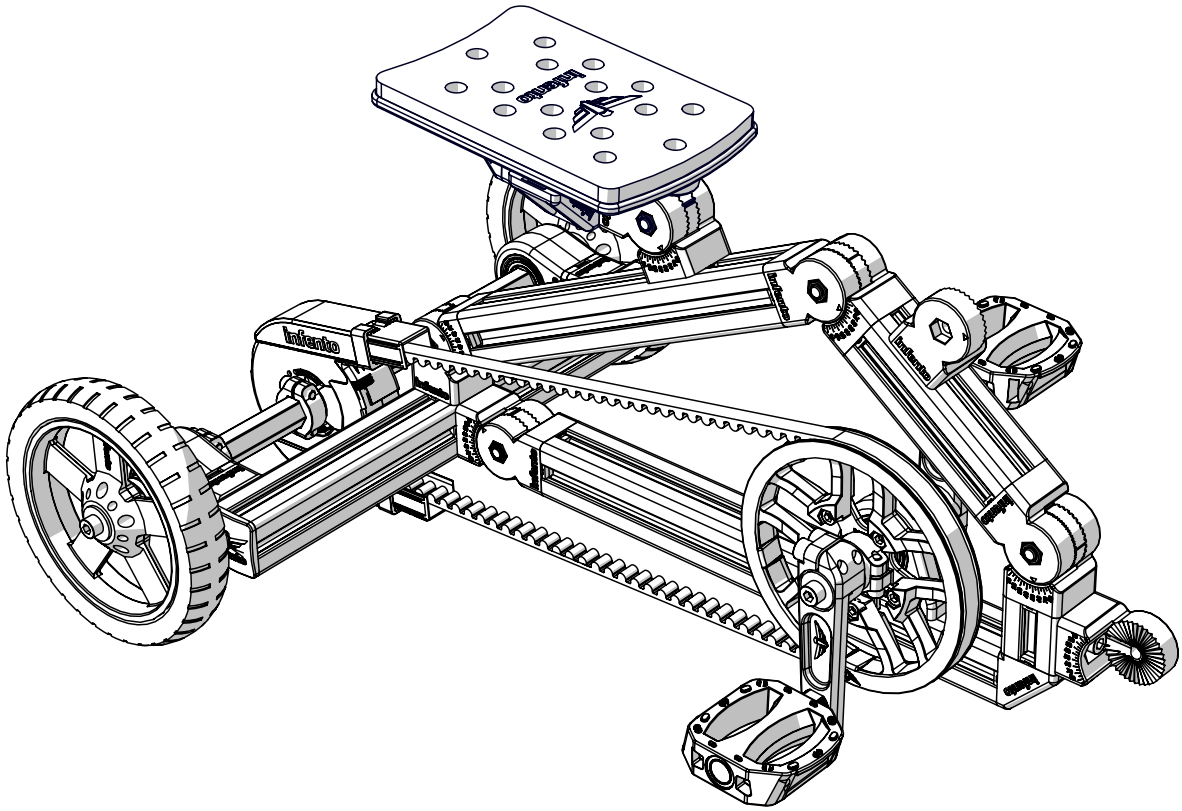

4x T-Positioning block

2x Square nut M6

2x Bolt M6x45

2x Bolt M8x20

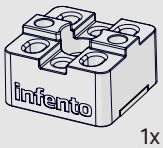

1x Profile connector (A)

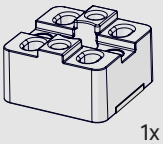
1x Profile connector (B)

If you have the **520 mm** profile in your kit, please skip to the next step. If not, you can construct it using the profile connectors A and B, as shown below.

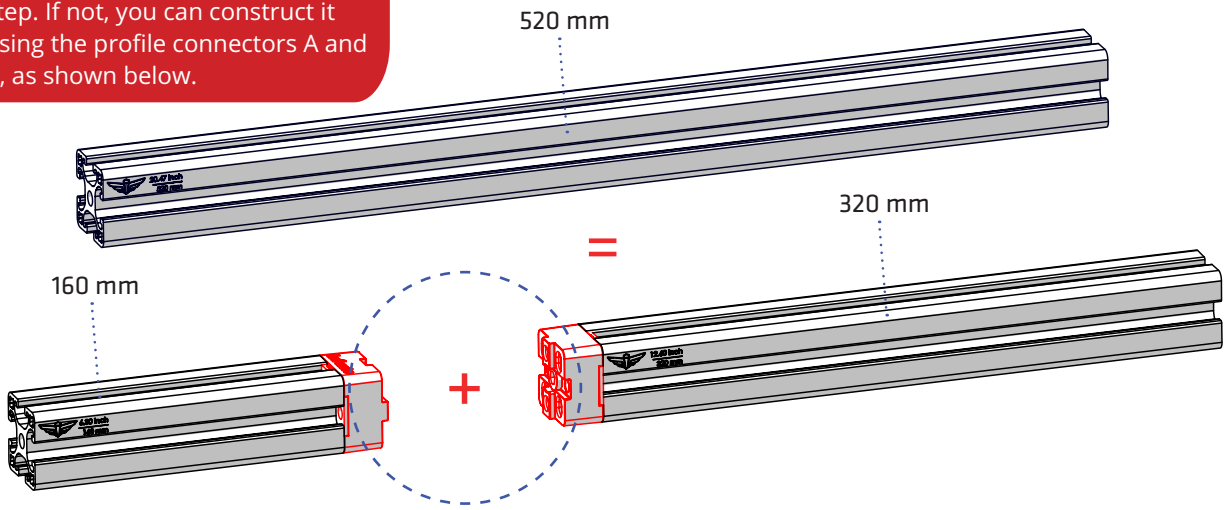

A

NOTE
The profile connector (part A) has the infento word-emblem on it and doubles as a T-joint.

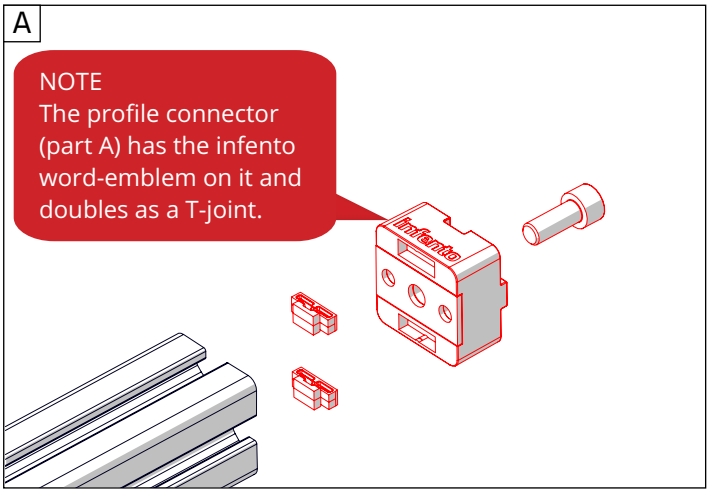

B

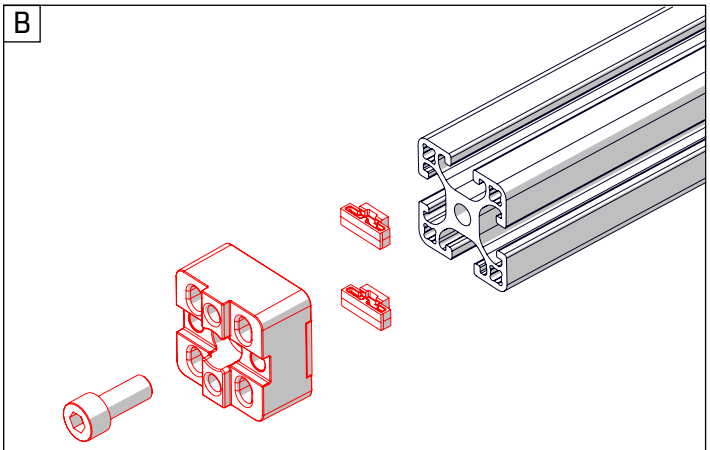

C

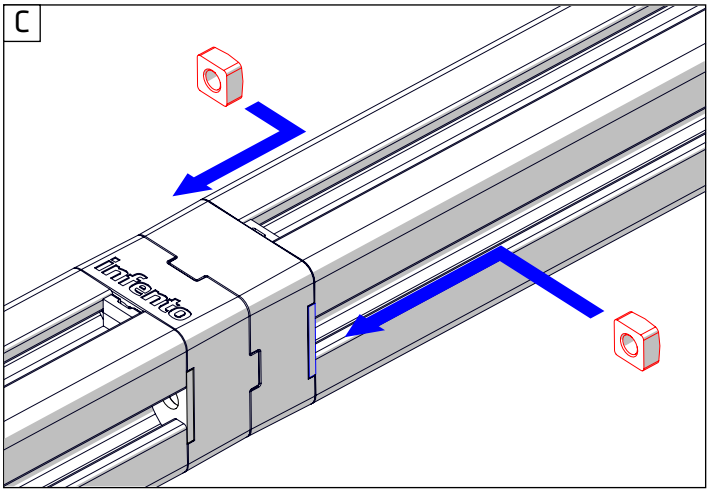

D

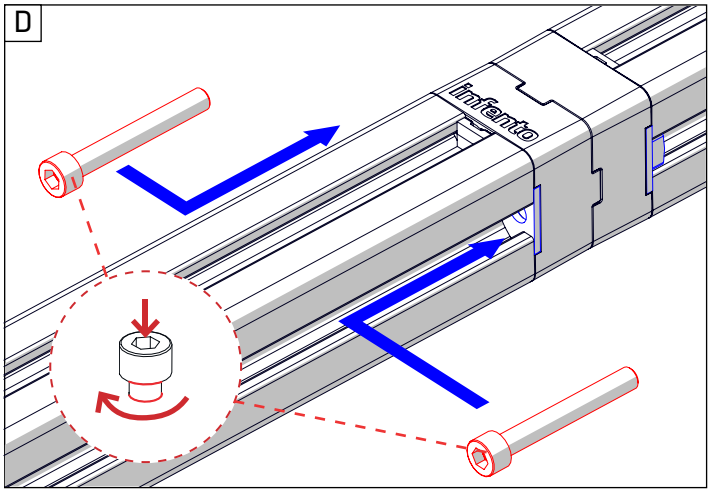

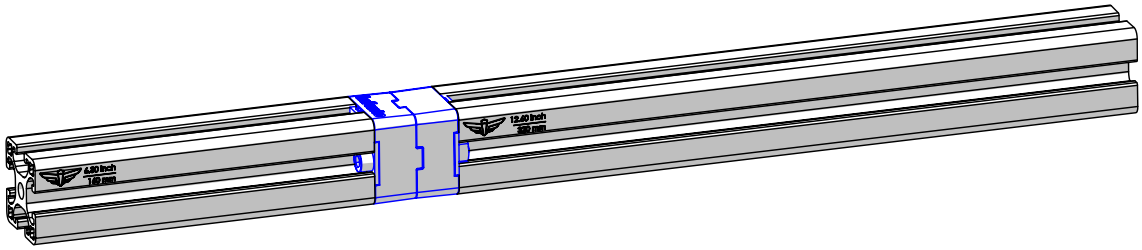

38

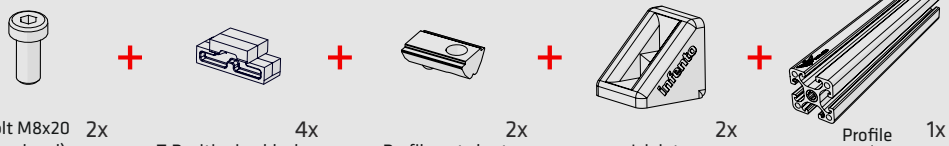

Bolt M8x20 (low head) 2x
T-Positioning block 4x
Profile nut short 2x
L-joint 2x
Profile 20.47 inch | 520 mm 1x

NOTE
Place the profile connector in the same orientation as shown here, then proceed.

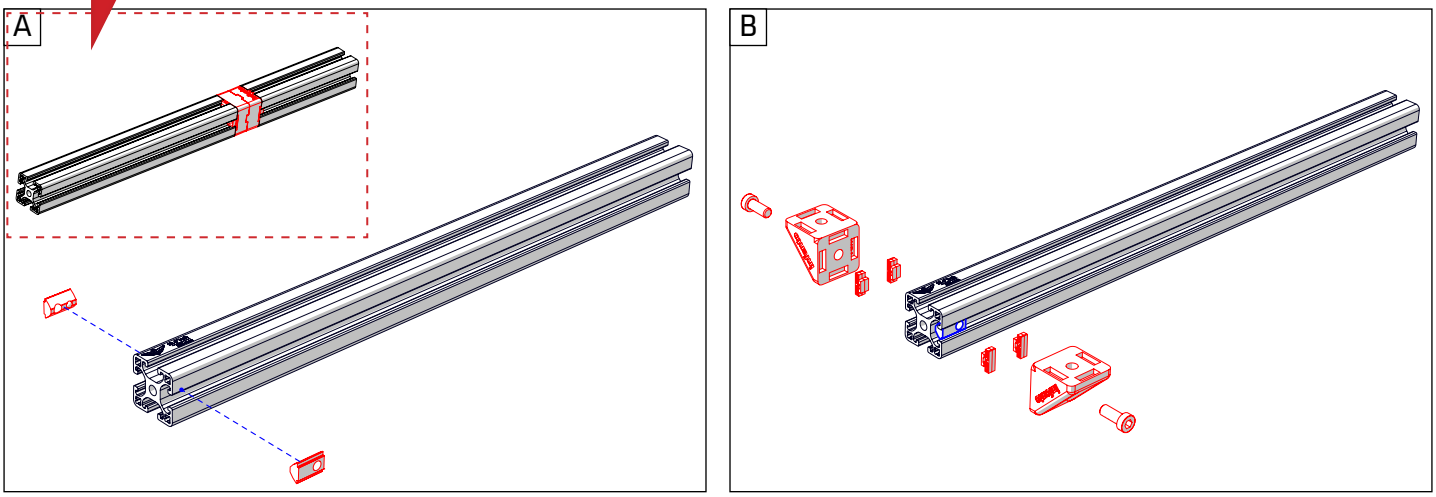

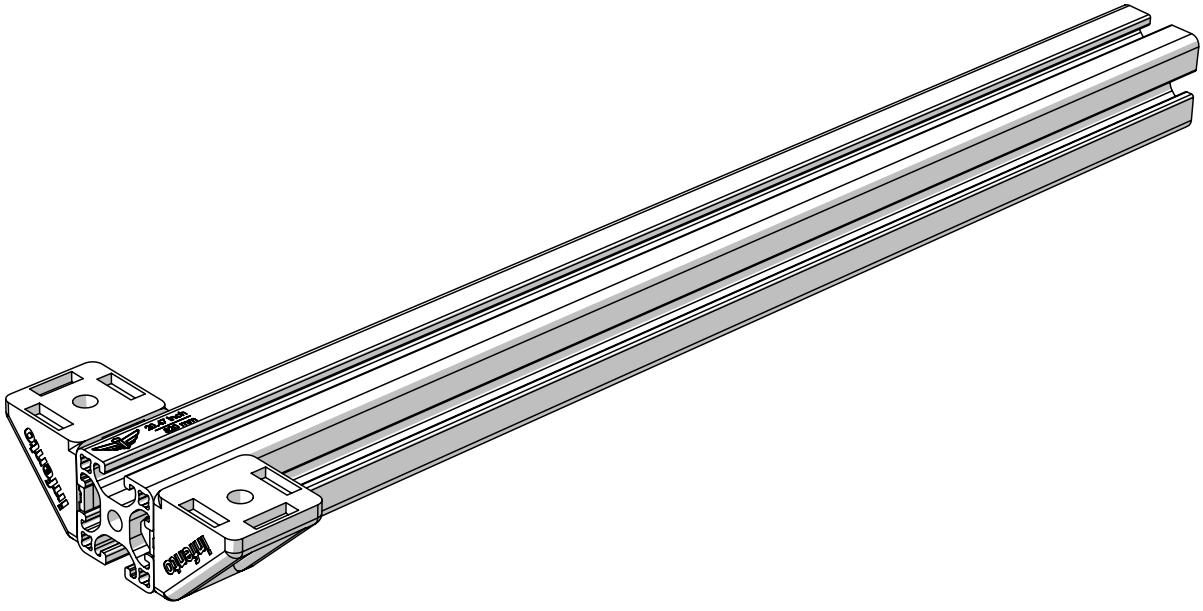

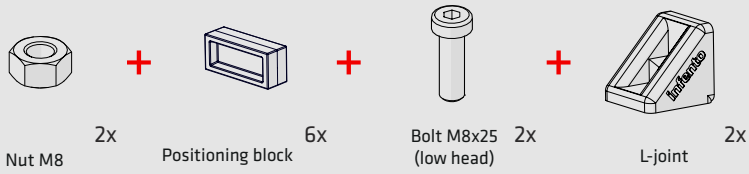

Nut M8 2x + Positioning block 6x + Bolt M8x25 (low head) 2x + L-joint 2x

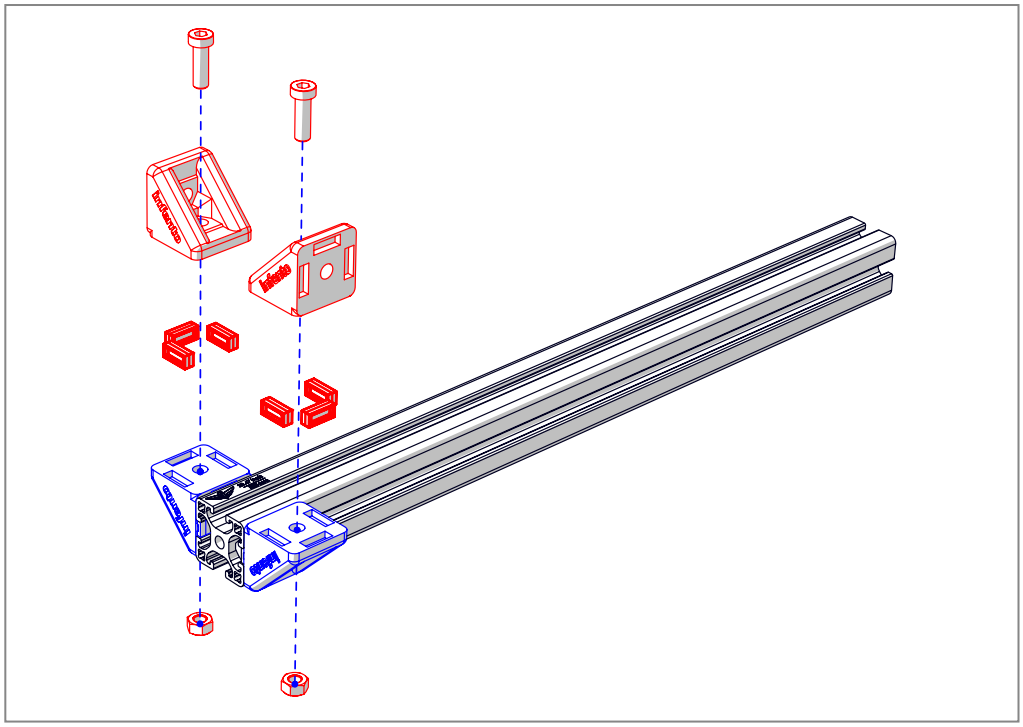

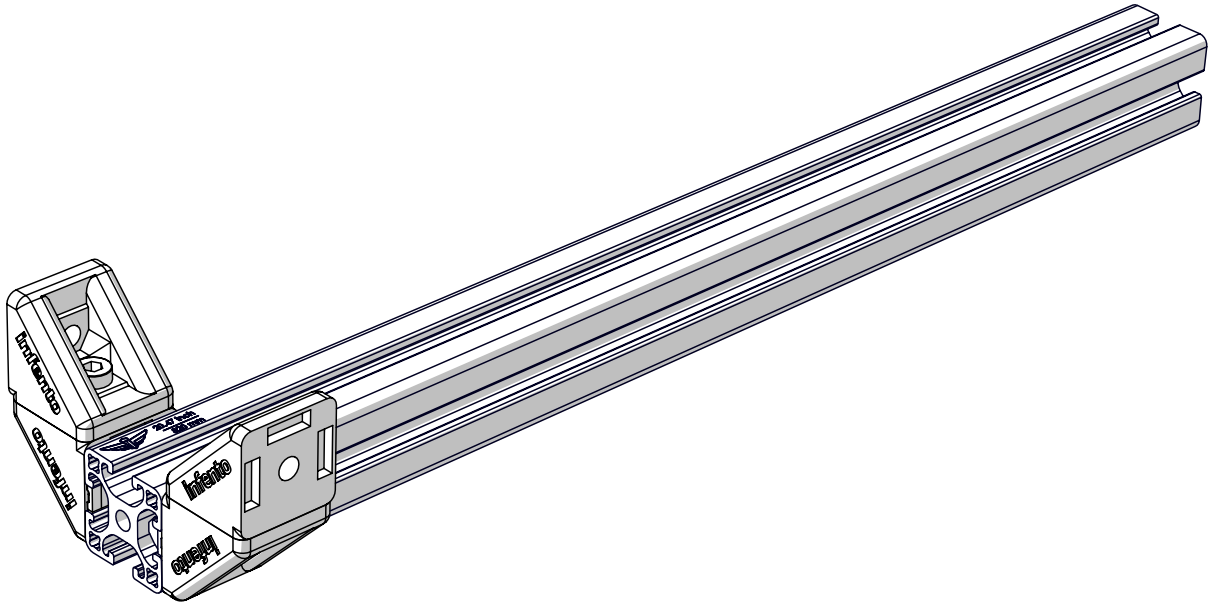

40

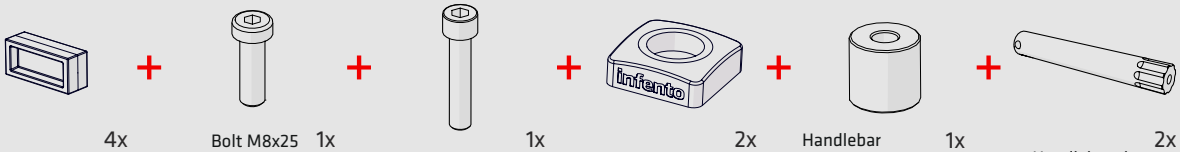
Positioning block 4x
Bolt M8x25 (low head) 1x
Bolt M8x45 1x
Axle plate 2x
Handlebar extension 1x
Handlebar short 2x

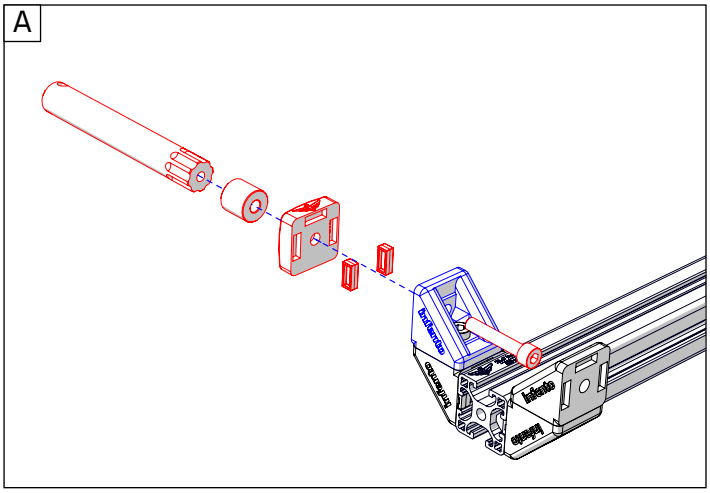
A

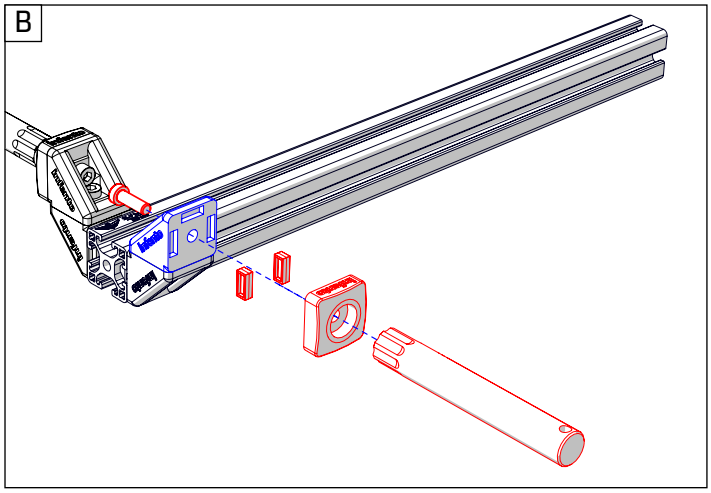
B

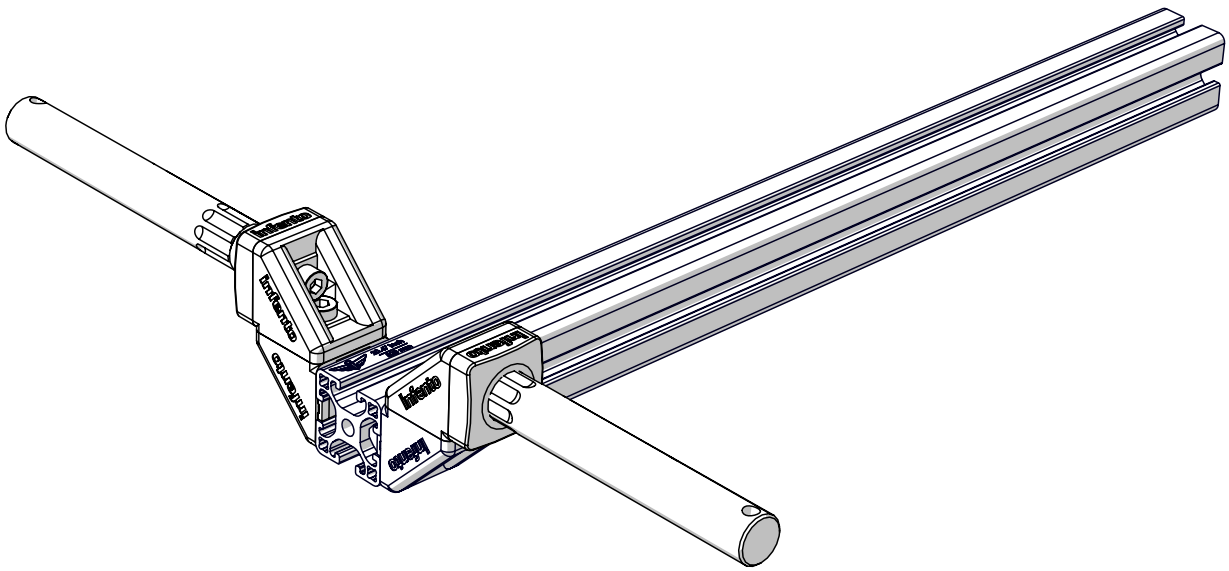

If your Kit contains a white fastener bag with 12 Nock Washers, please follow the steps on this page. If not, please skip to the next page of the manual.

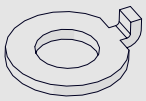

2x
Nock washer M8-16

This is the U-block. Before being able to use this part, you need two Nock Washers M8-16. Press these washers into the slots.

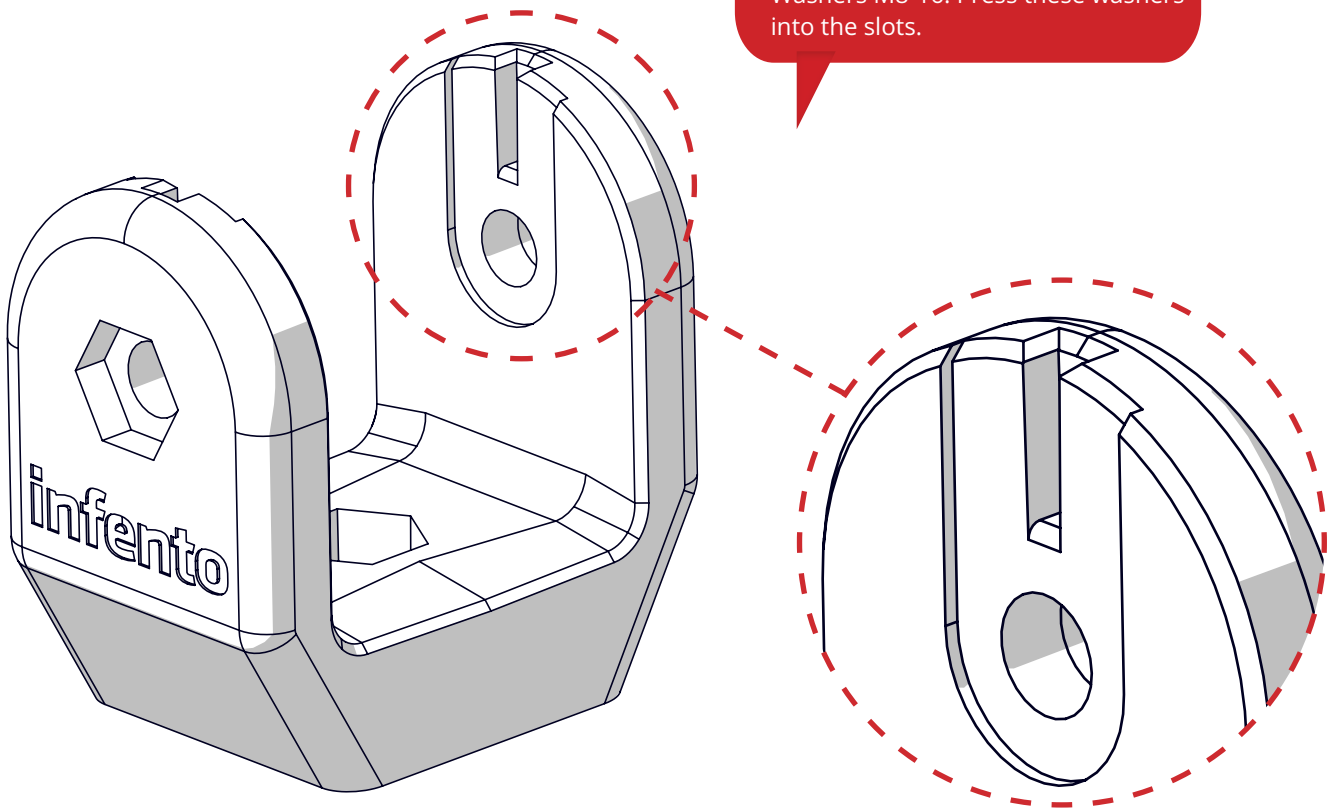

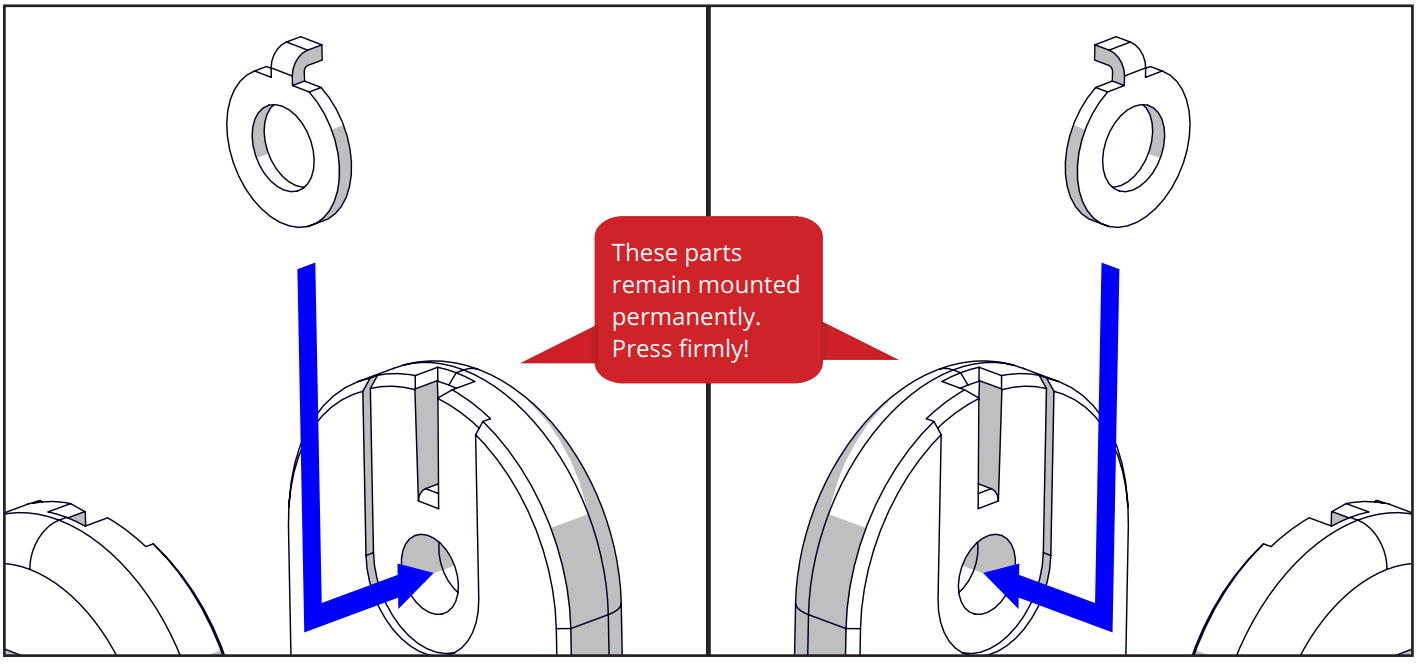

These parts remain mounted permanently. Press firmly!

42

4x T-Positioning block + 2x Profile nut short + 2x Bolt M8x20 + 2x U-Block

A

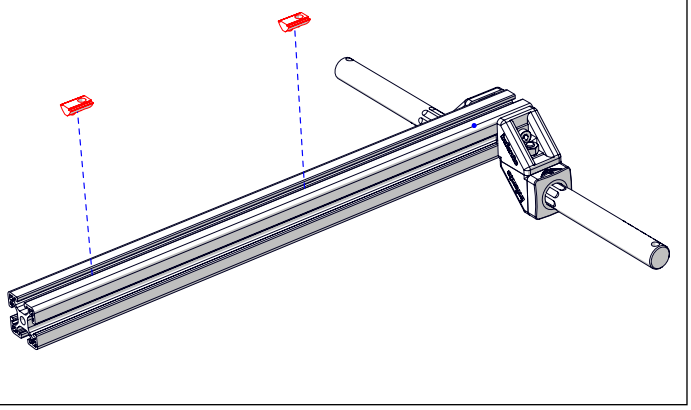

B

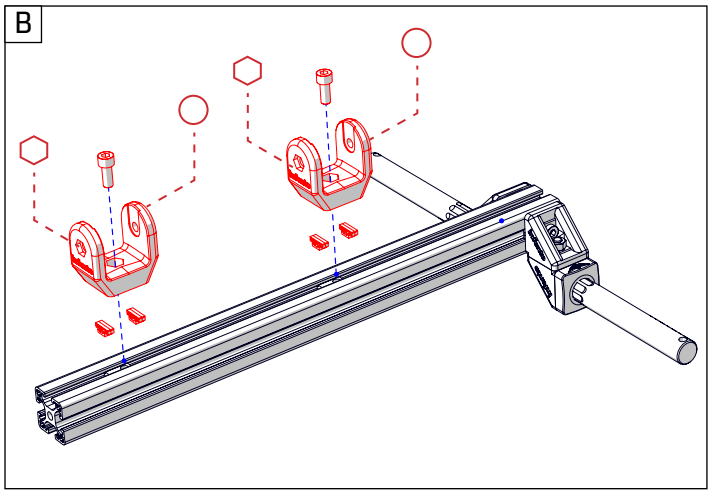

C

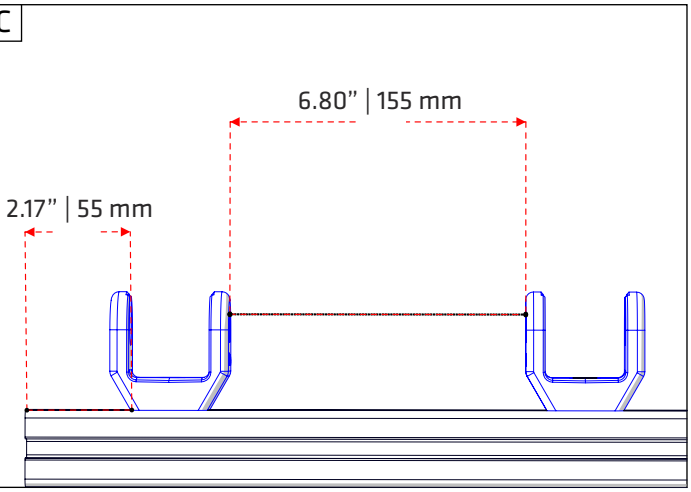

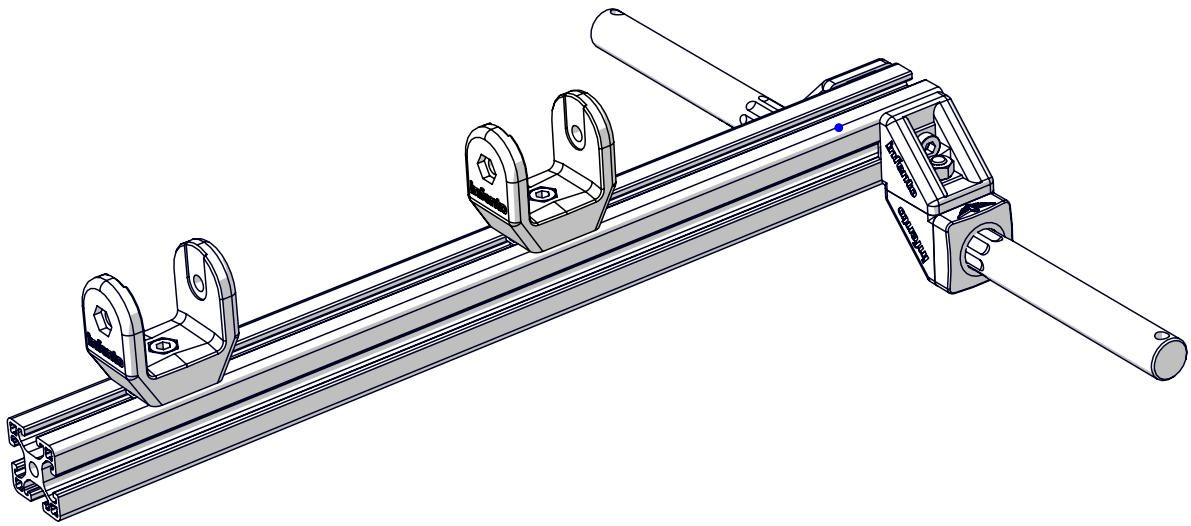

43

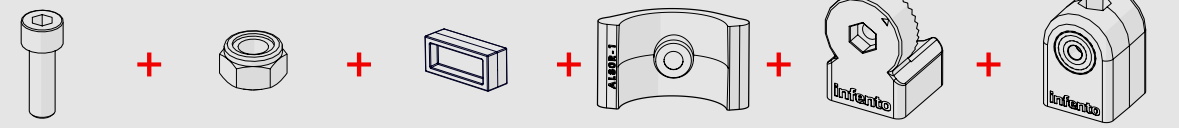

Bolt M8x25 2x

Locknut M8 2x

Positioning block 4x

Angle limiter 40° 2x

Multi angle joint 2x

Bearing block 40x40_8 2x

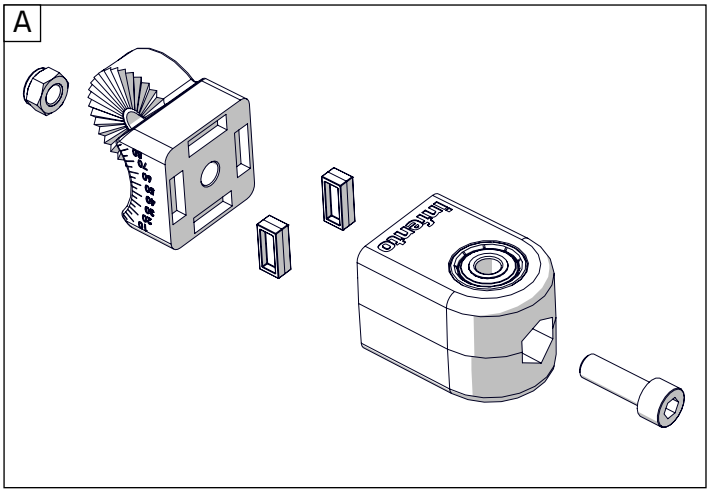

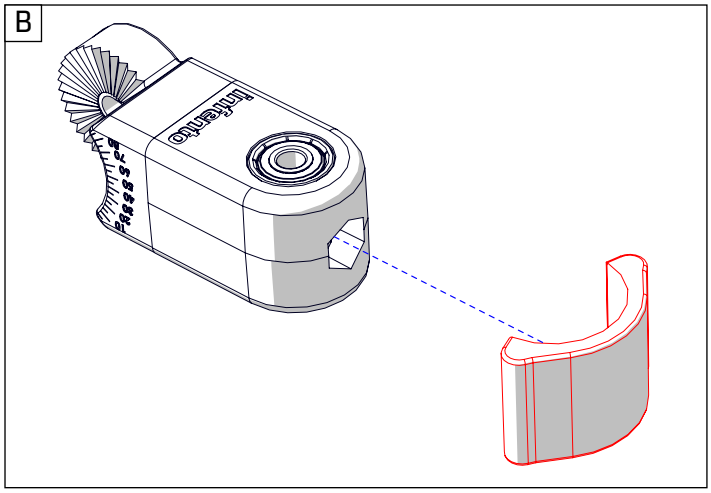

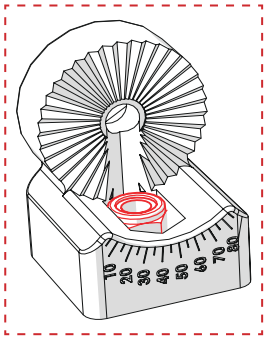

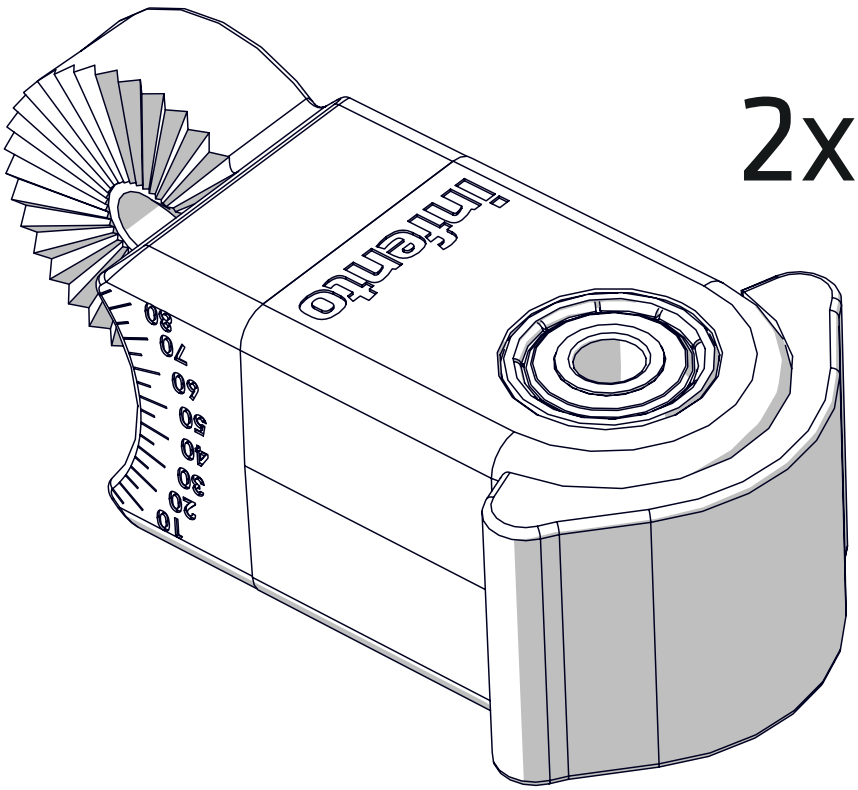

44

2x Washer M8-16 + 1x Locknut M8 + 1x Bolt M8x60

If your U-block or Kit doesn't have the M8-16 Nock Washers, you can use the regular M8-16 washers as shown here.

A

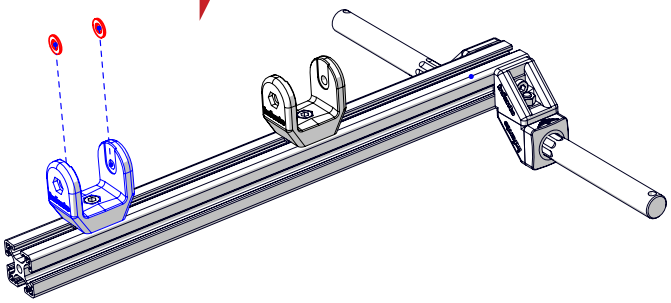

B

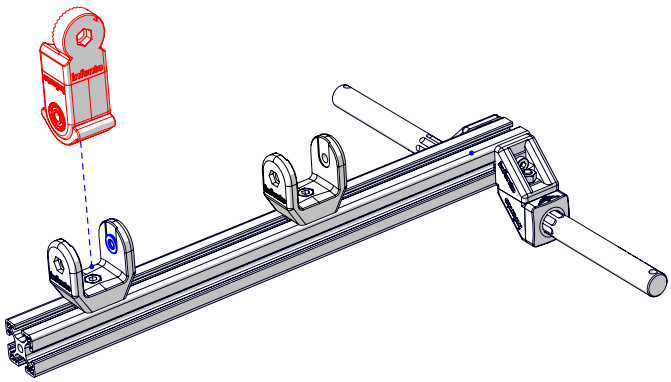

C

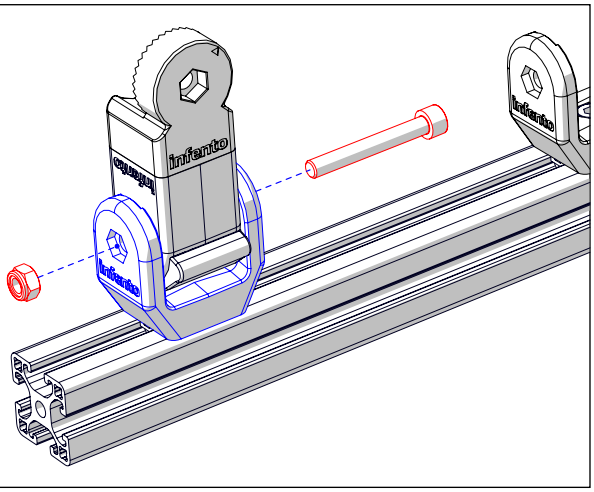

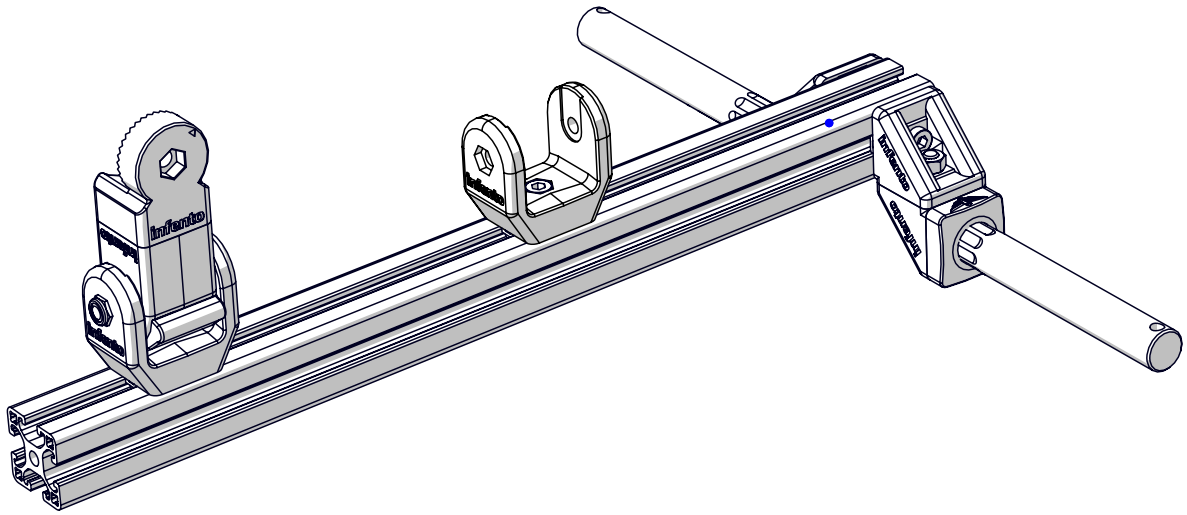

45

Protect cap 1x

Washer M8-16 2x

Locknut M8 1x

Bolt M8x60 1x

A

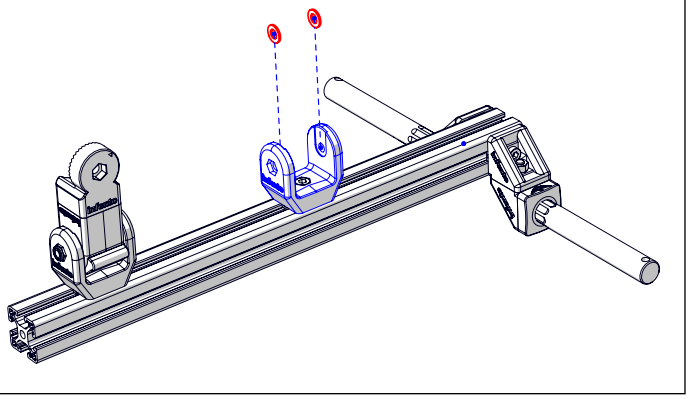

B

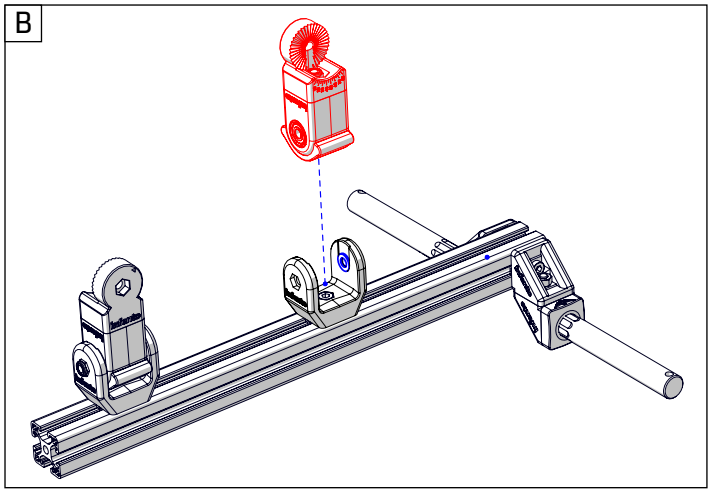

C

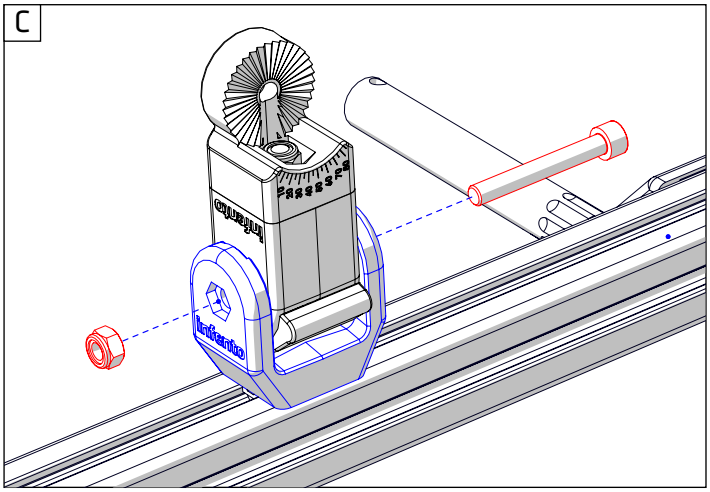

D

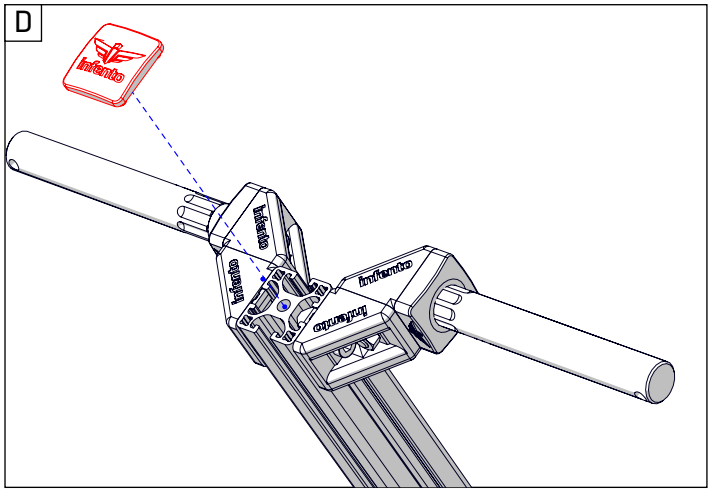

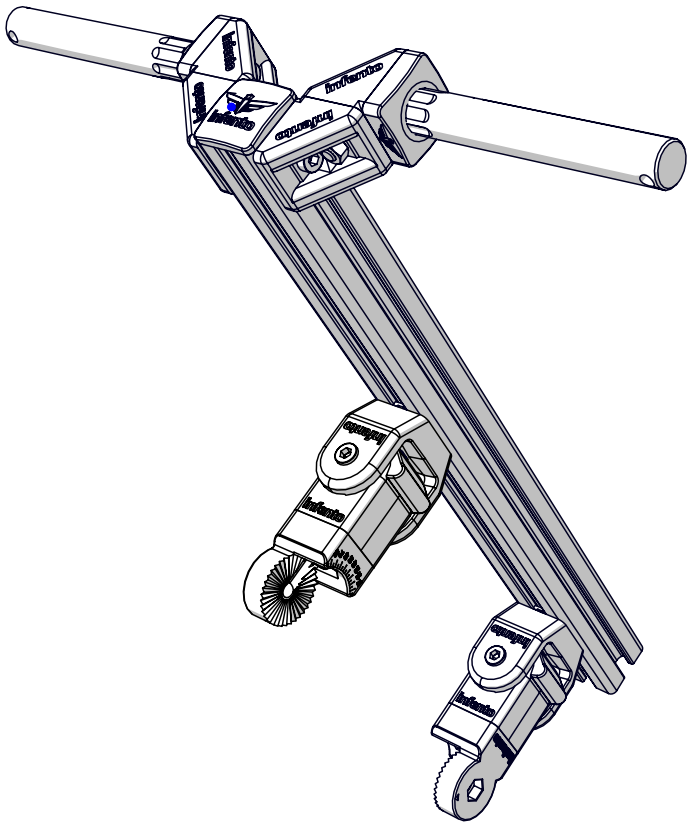

If your Kit contains a white fastener bag with 12 Nock Washers, please follow the steps on this page. If not, please skip to the next page of the manual.

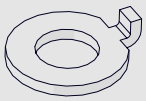

2x
Nock washer M8-16

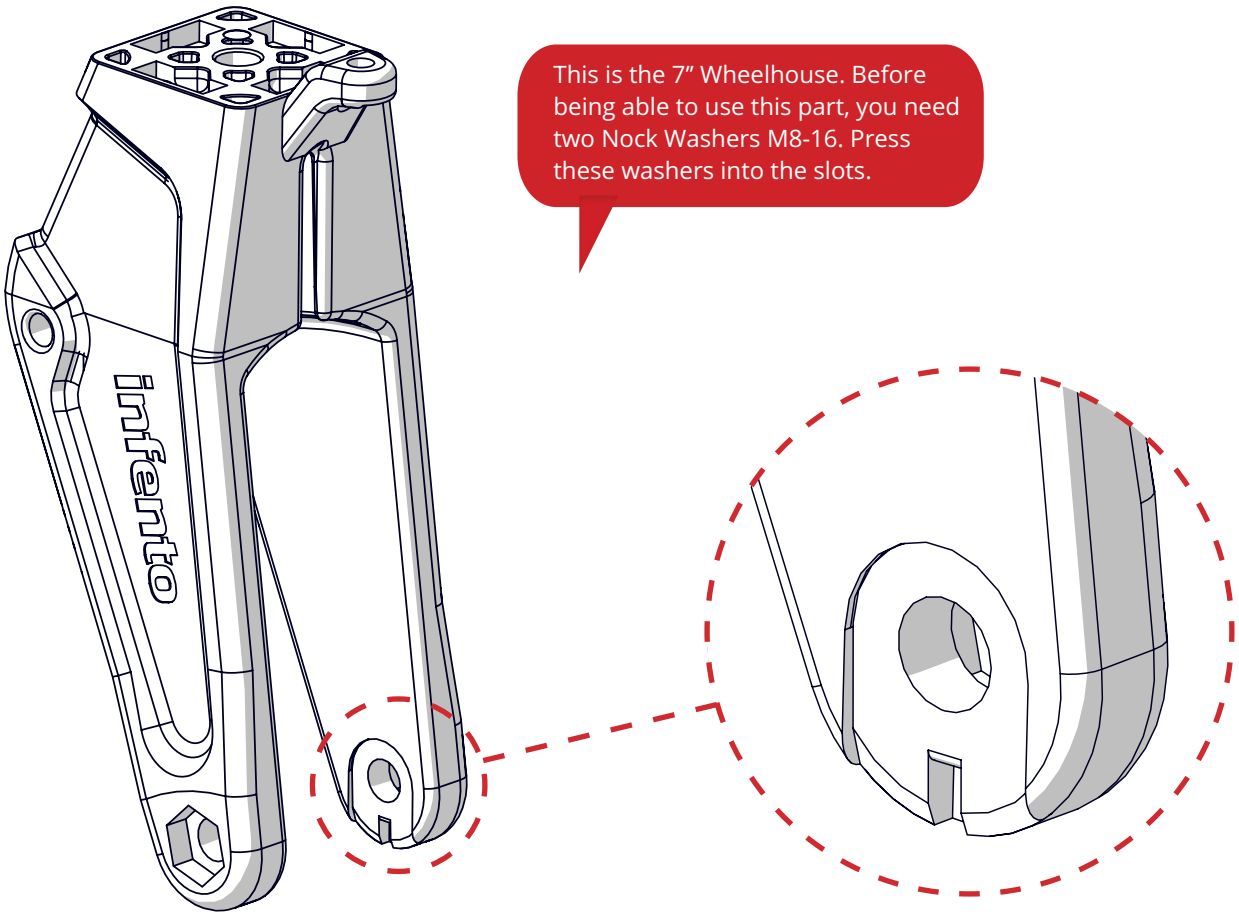

This is the 7” Wheelhouse. Before being able to use this part, you need two Nock Washers M8-16. Press these washers into the slots.

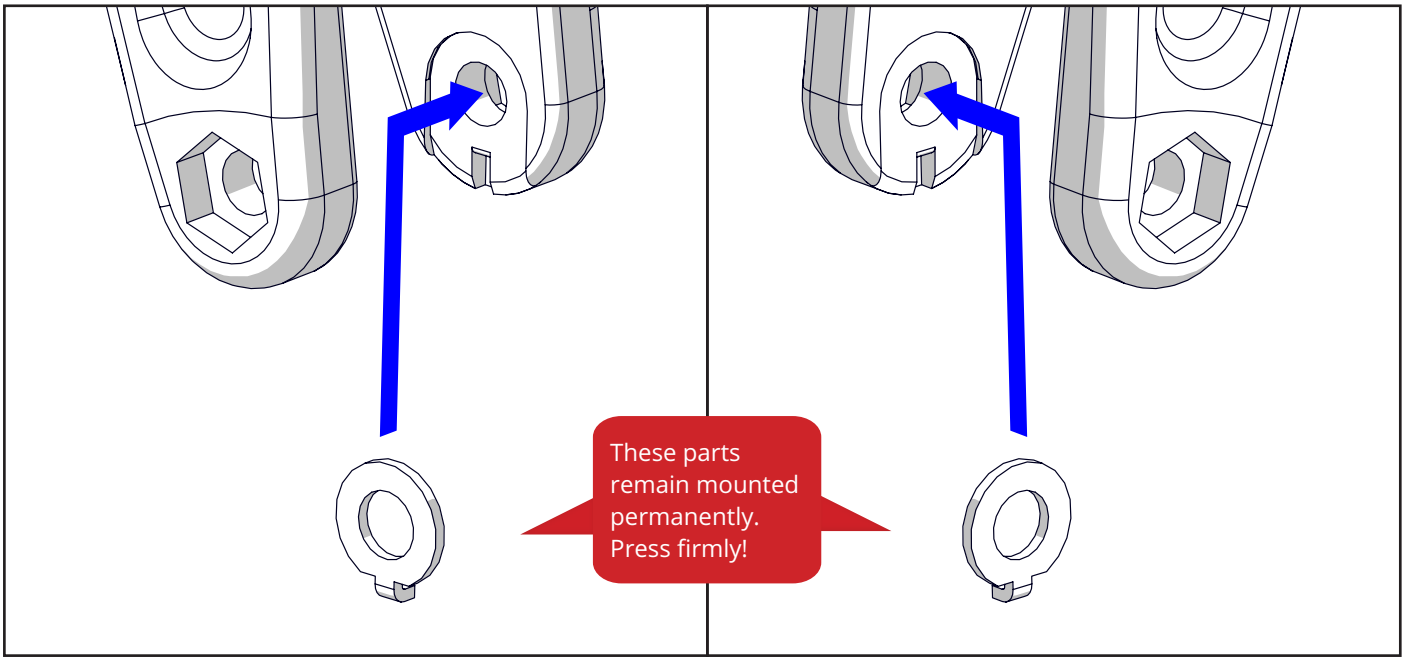

These parts remain mounted permanently. Press firmly!

4x T-Positioning block + 1x Washer M8-24 + 1x Bolt M8x25 nylock + 1x 7 inch wheel house

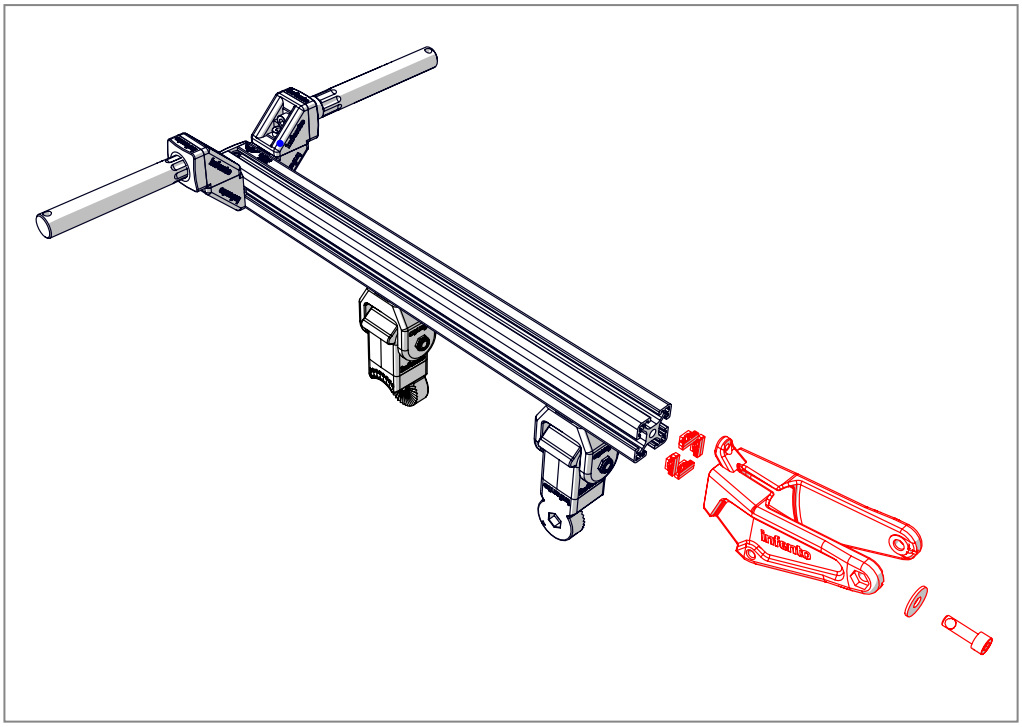

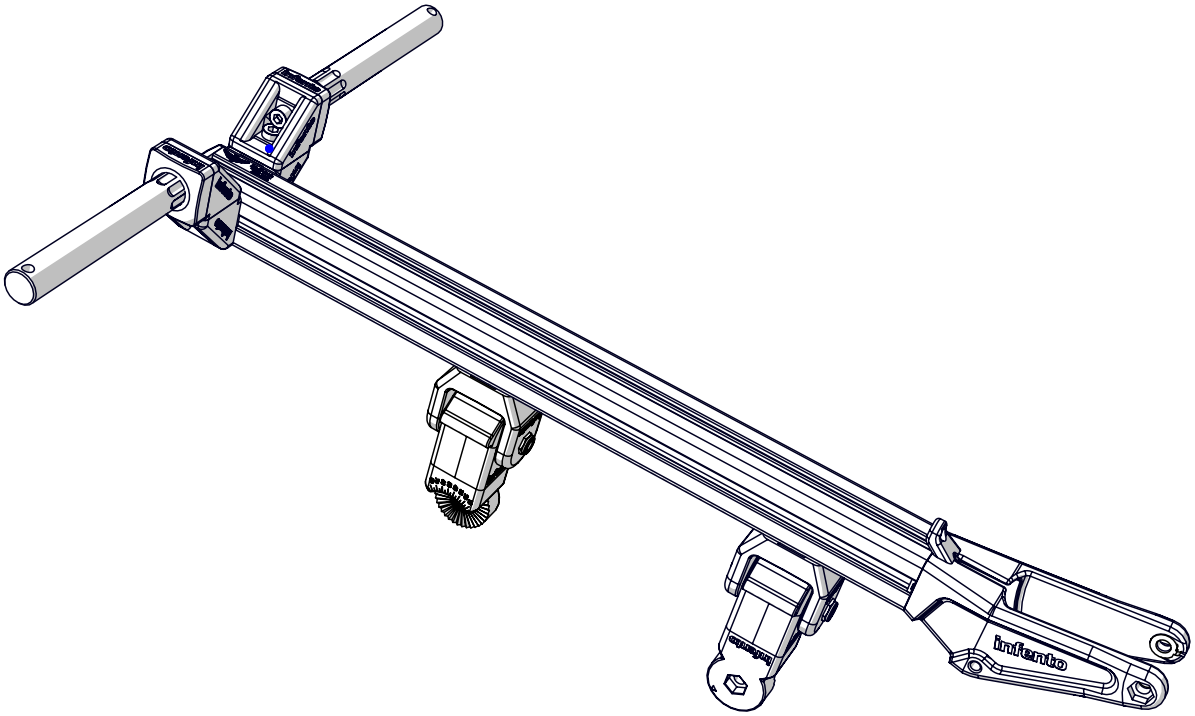

48

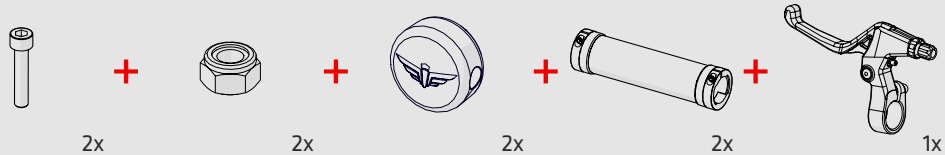

2x Bolt M6x30 + 2x Locknut M6 + 2x Handlebar knob + 2x Handgrip + 1x Brake lever left

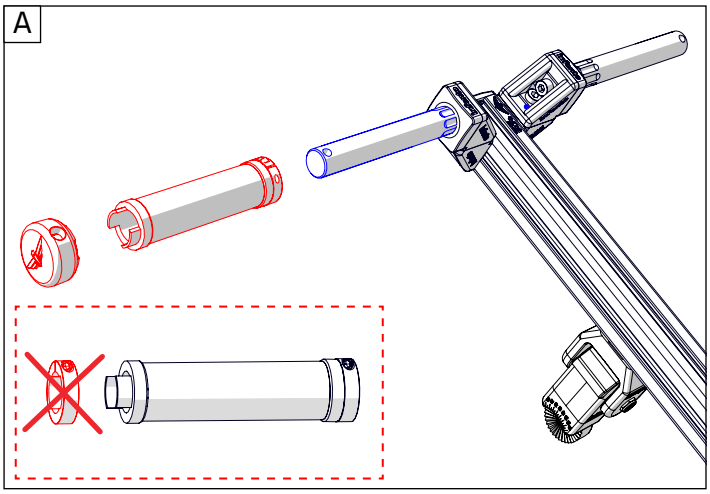

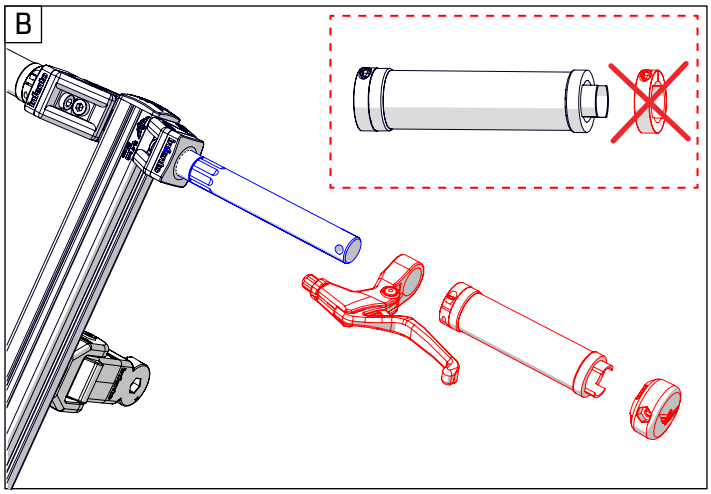

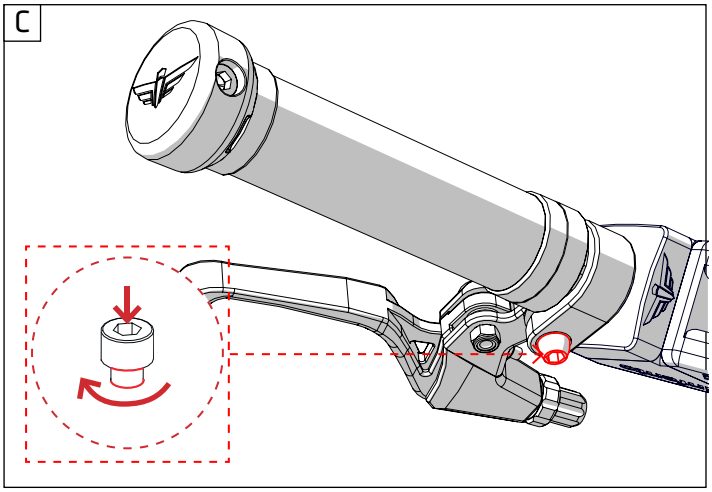

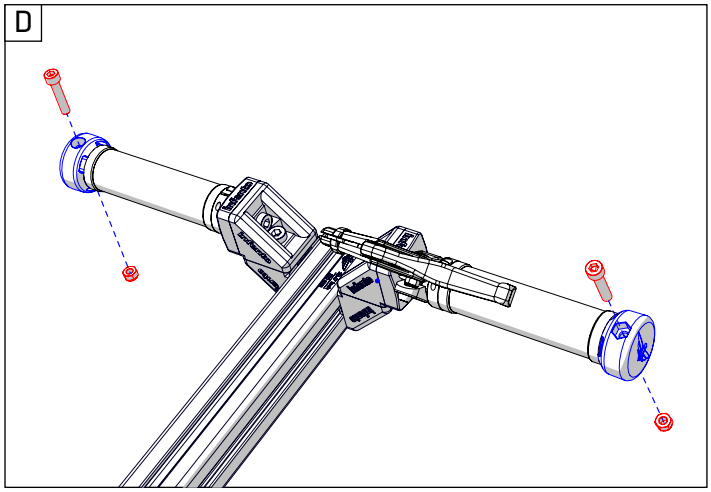

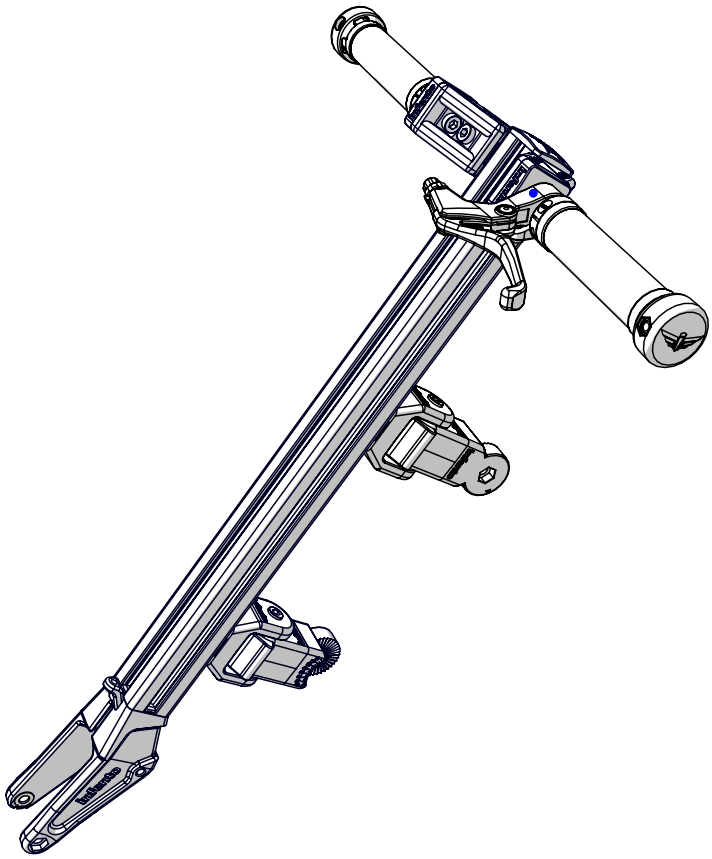

49

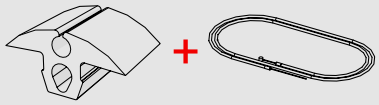

Brake cable clip 1x

Brake cable 27.56 in | 700 mm 1x

A

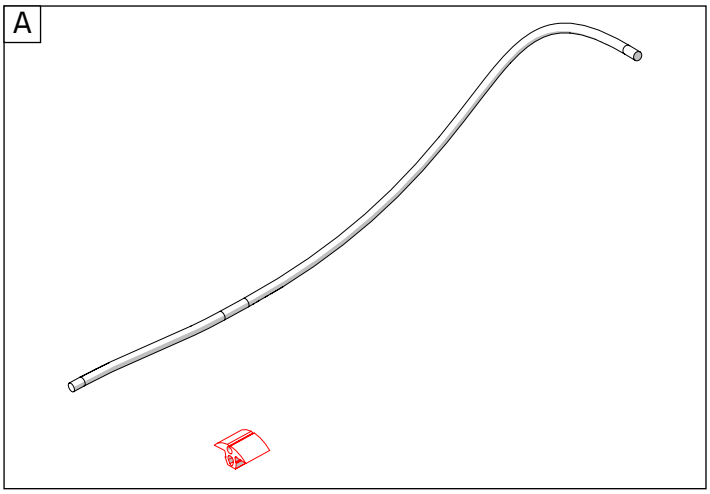

B

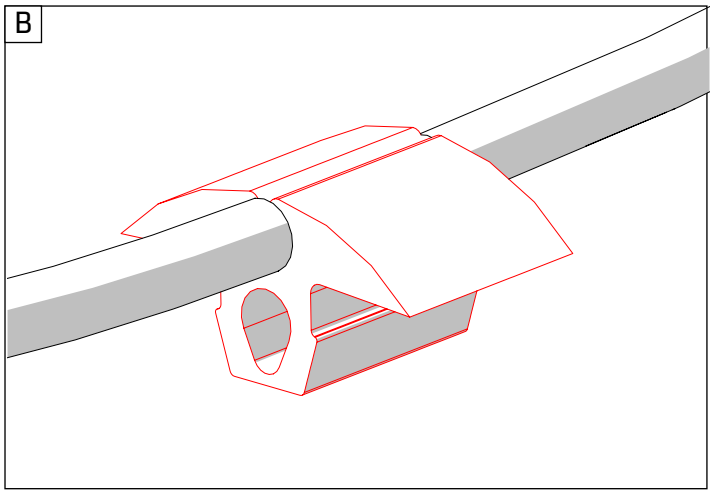

C

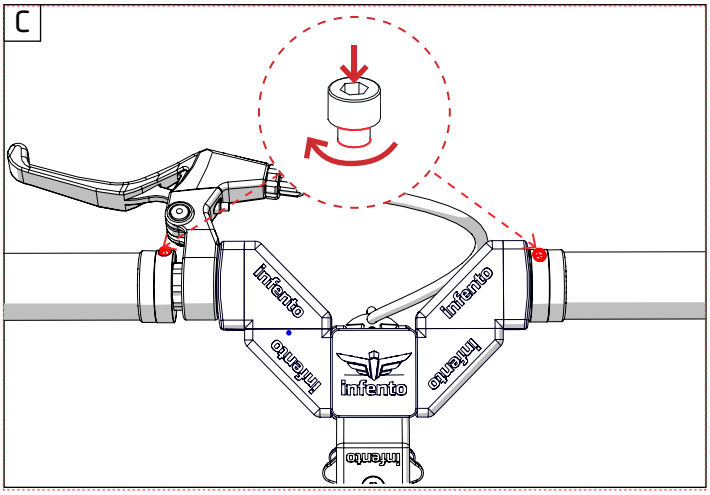

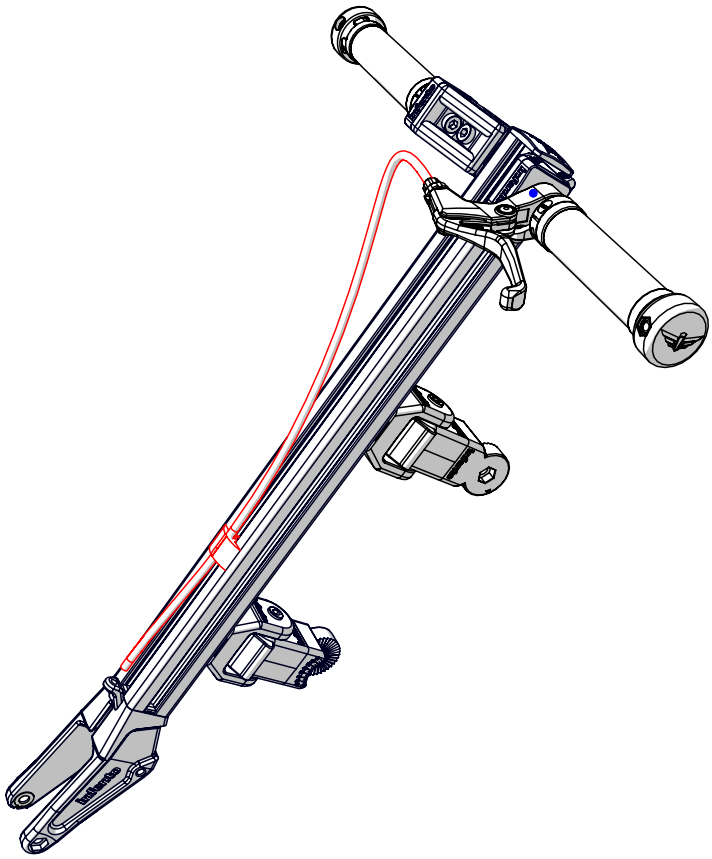

A

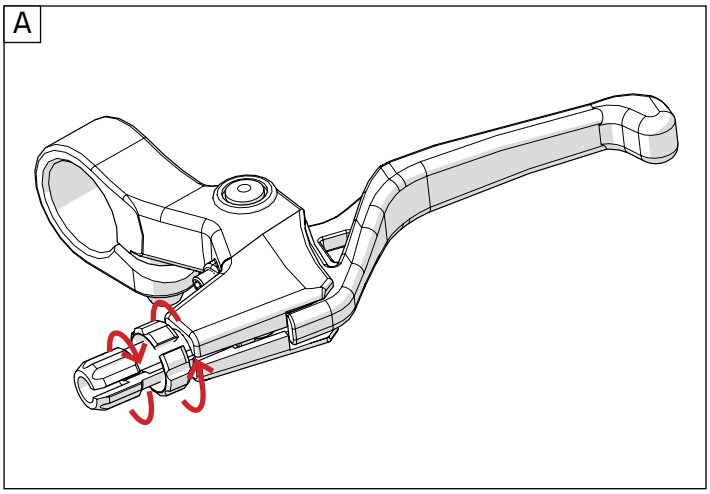

B

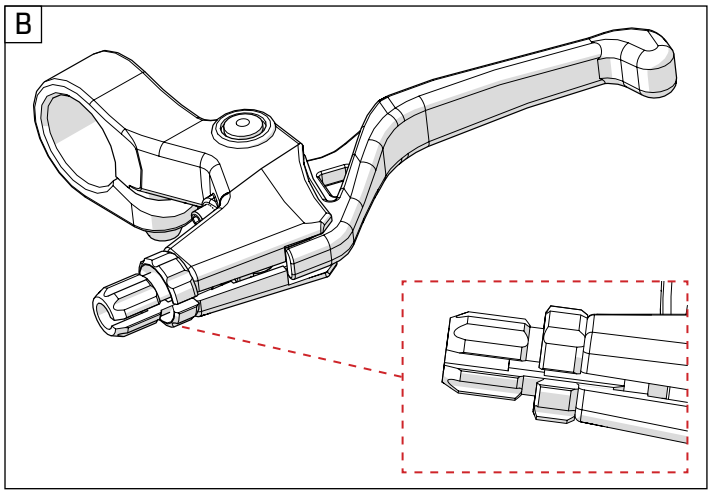

C

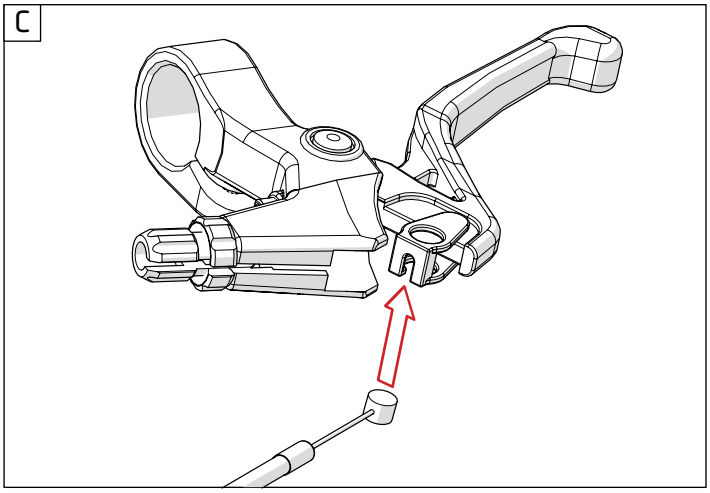

D

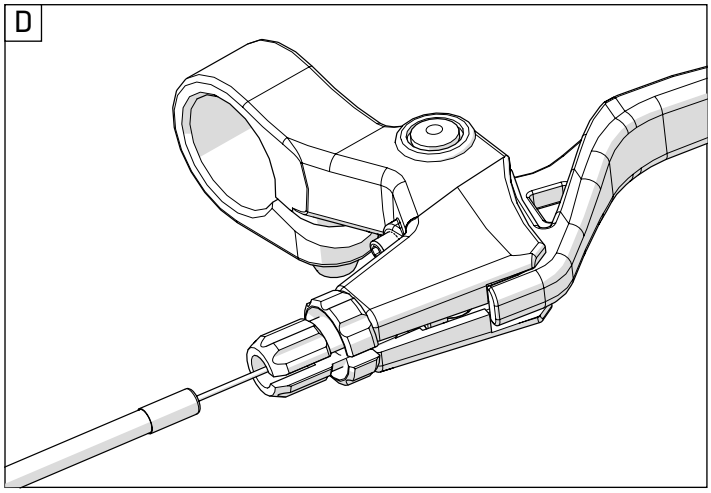

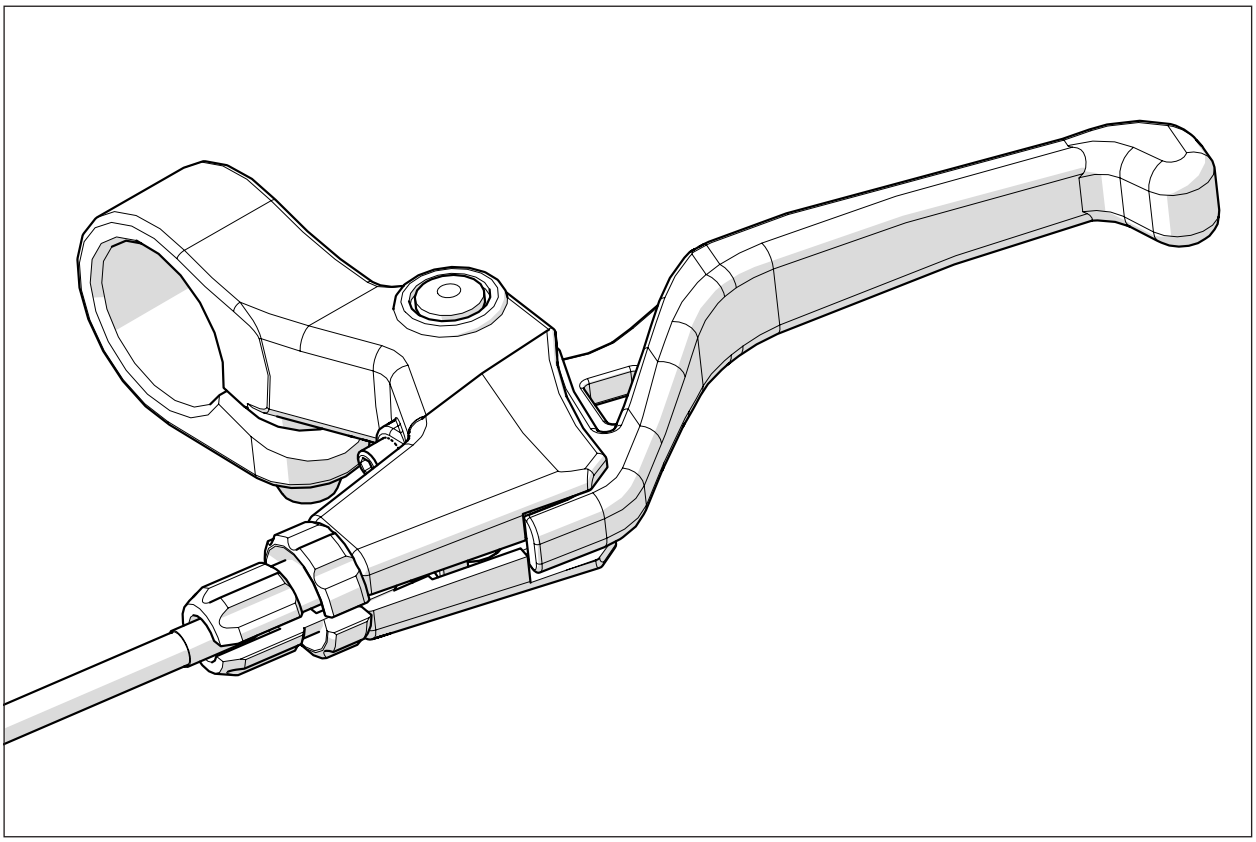

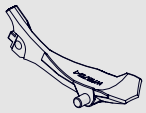

Brake 1x
7 inch wheel house

Clamping bracket 1x
7 inch wheel house

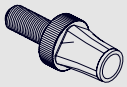

Brake cable 1x
adjuster

A

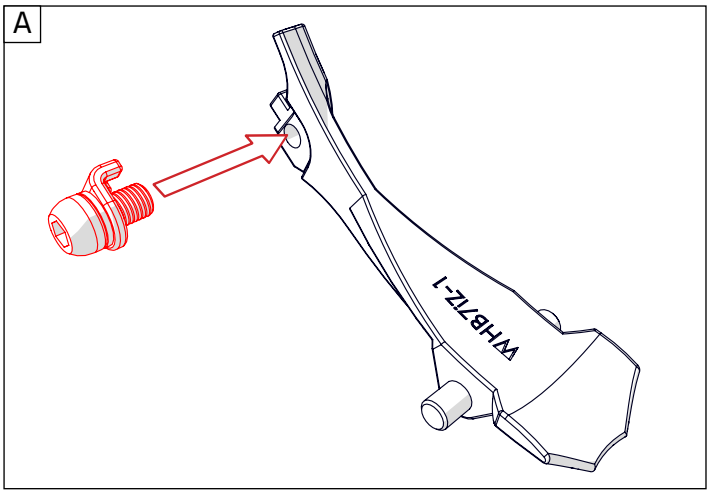

B

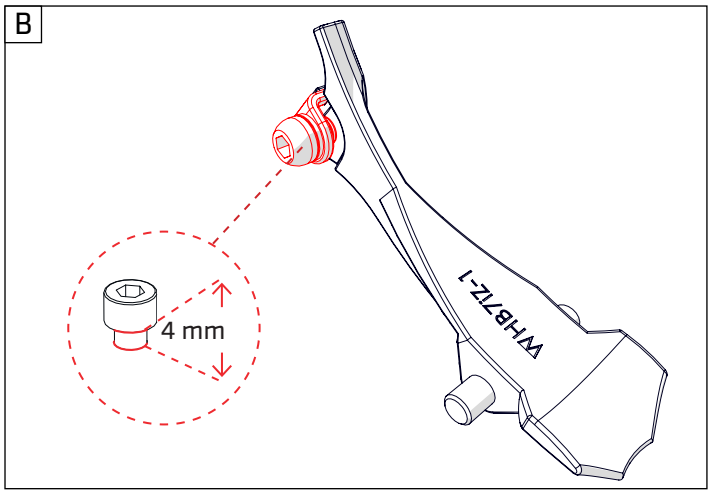

C

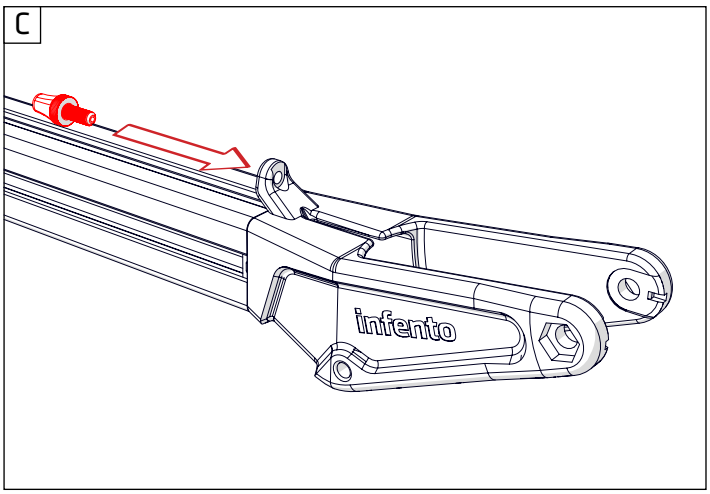

D

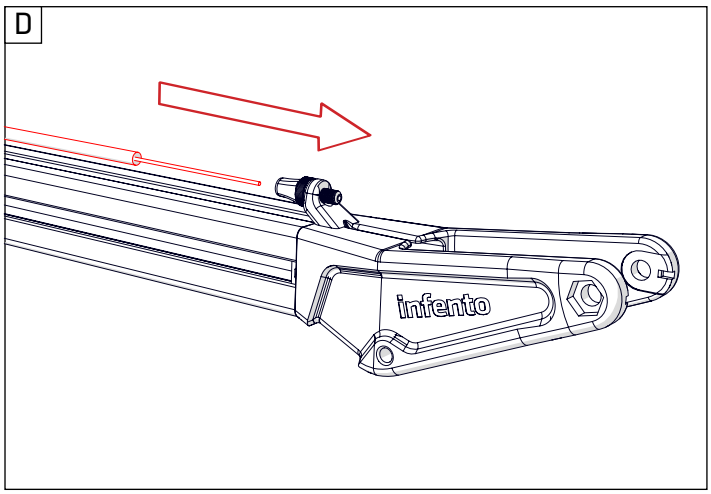

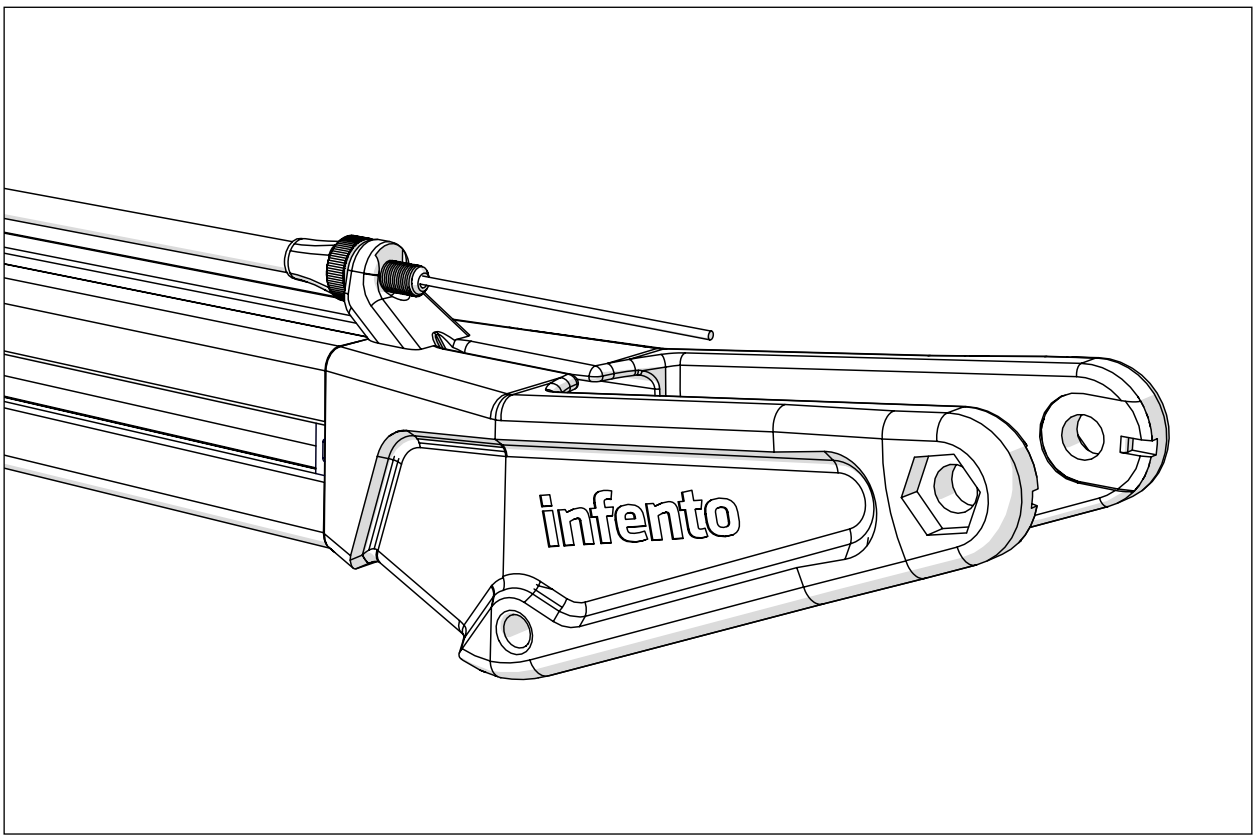

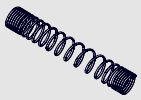

Spring
brake system
7 inch wheel house 1x

A

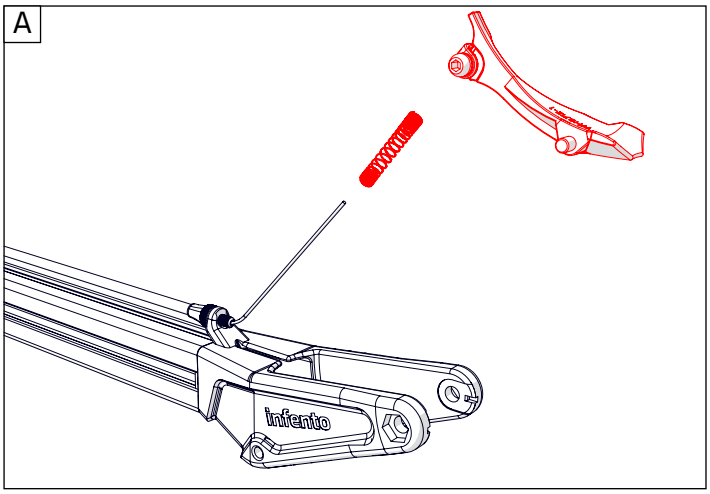

B

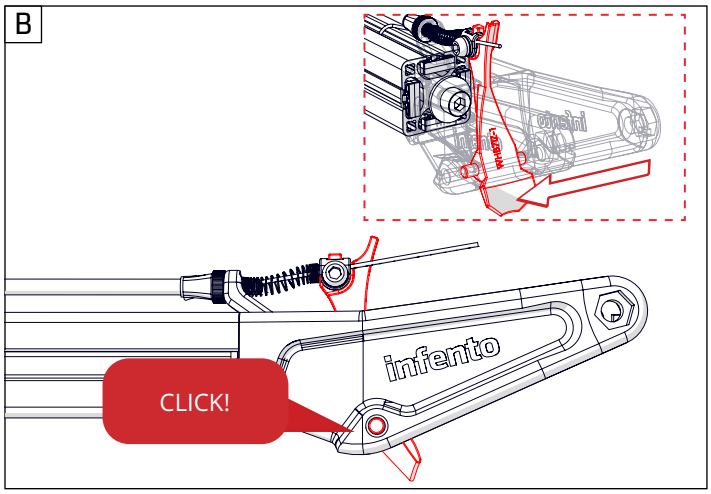

C

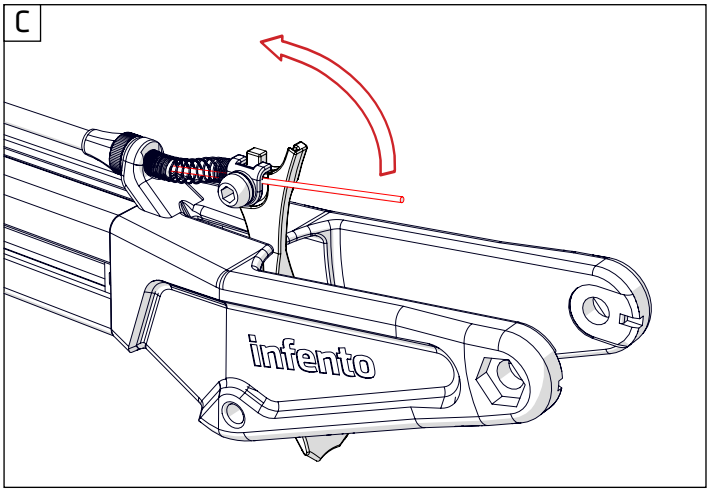

D

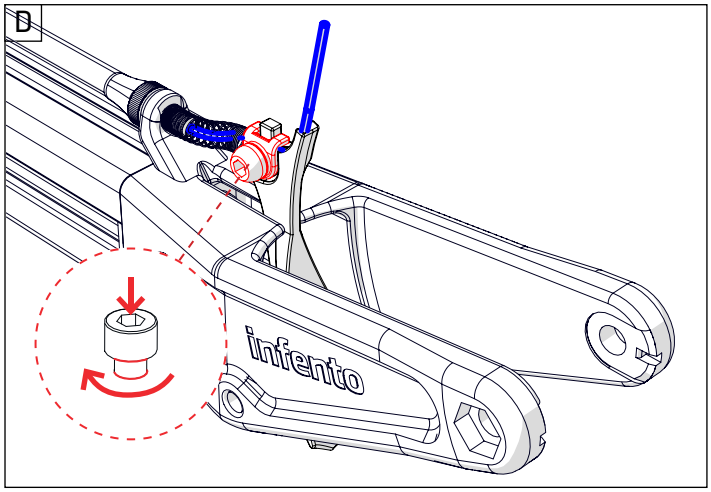

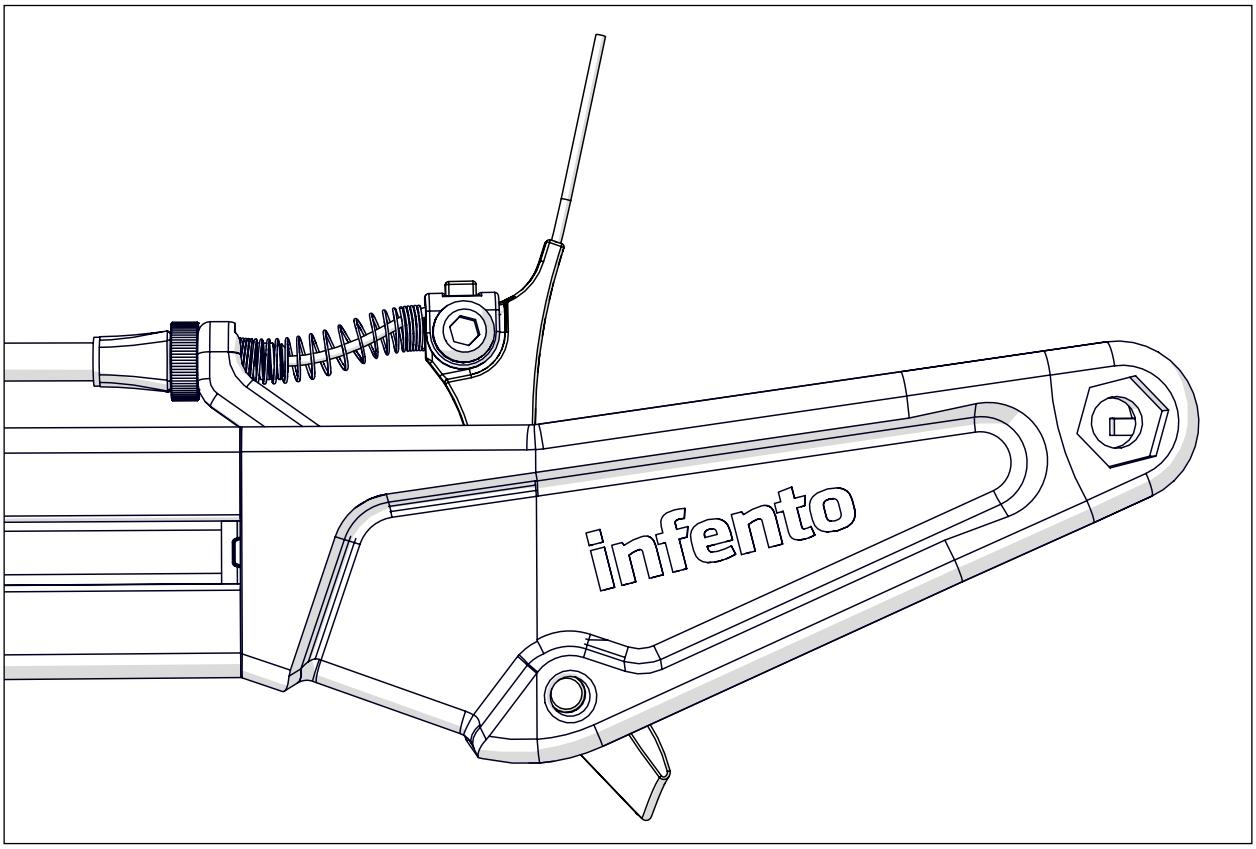

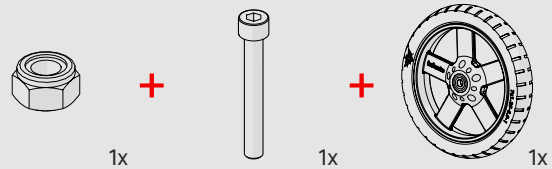
Locknut M8
1x
Bolt M8x55
1x
7 inch wheel
1x

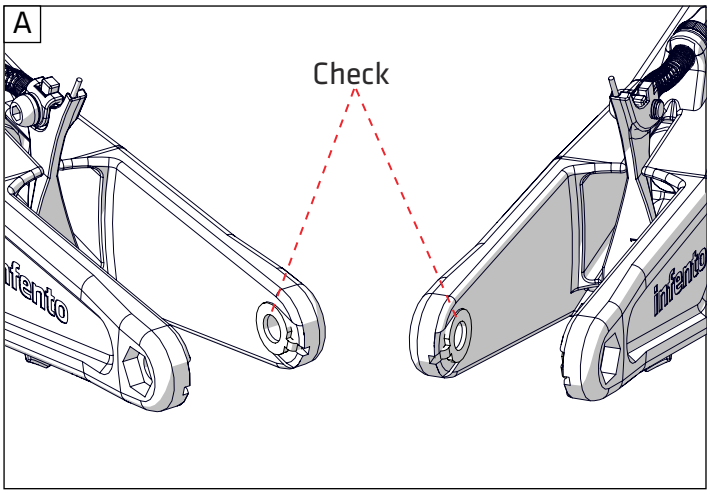
A
Check

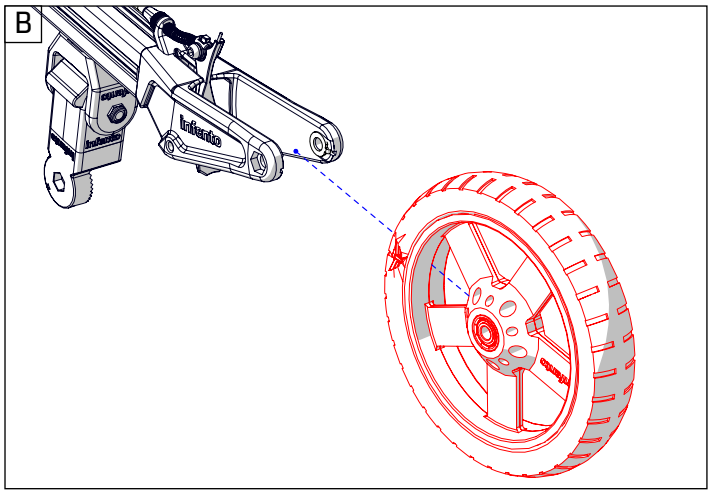
B

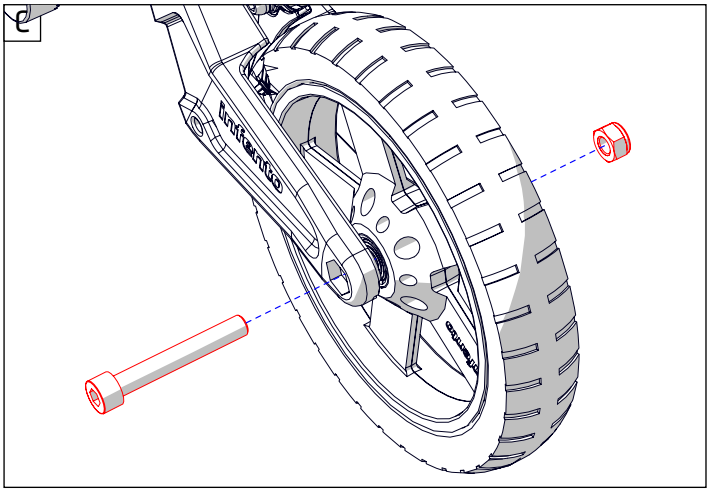
C

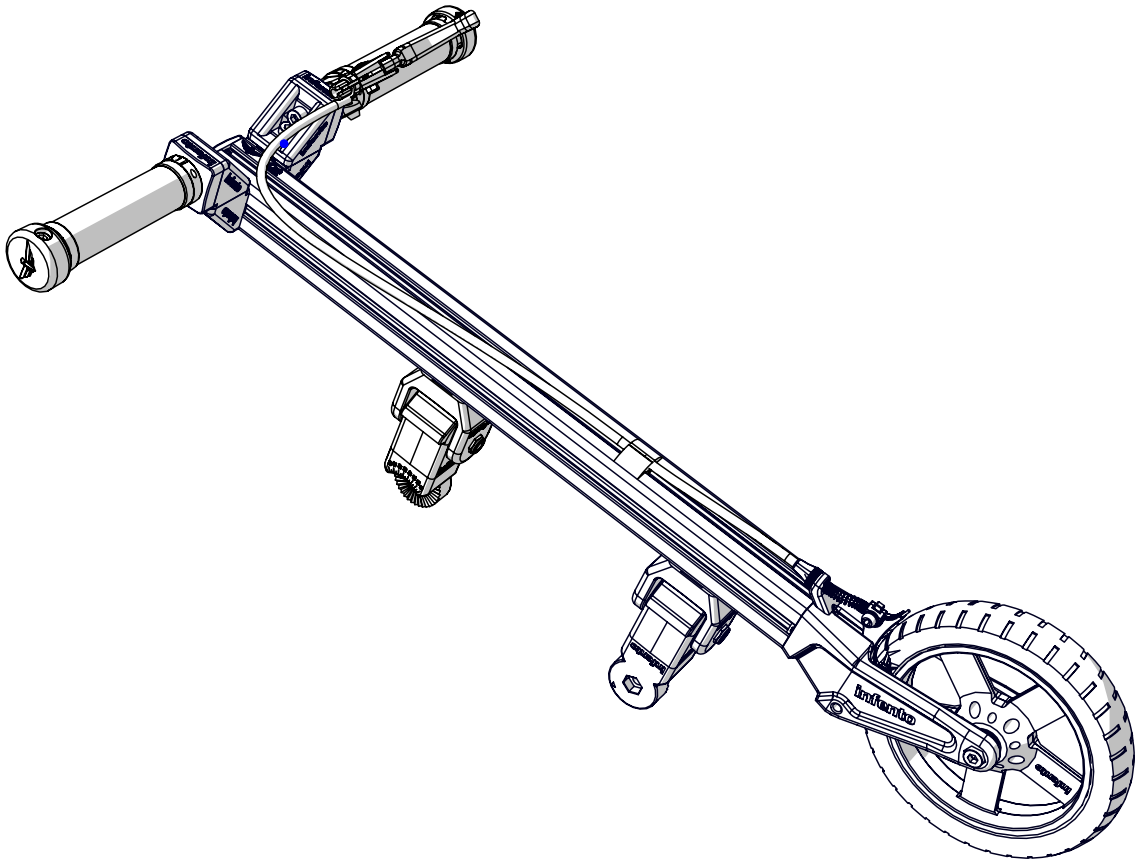

54

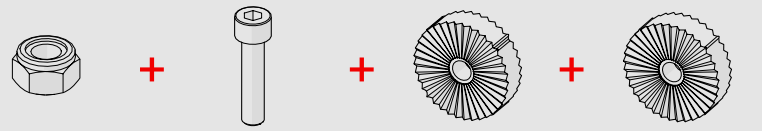

2x Locknut M8 + 2x Bolt M8x35 + 1x Knurled disc 2 stripes + 1x Knurled disc 1 stripe

A

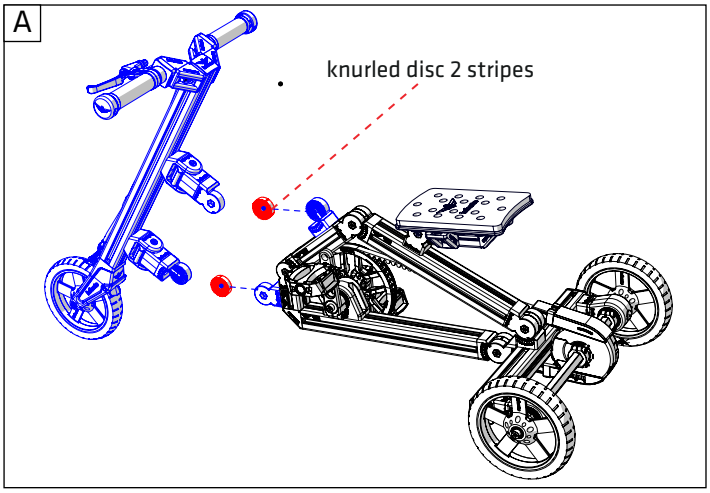

B

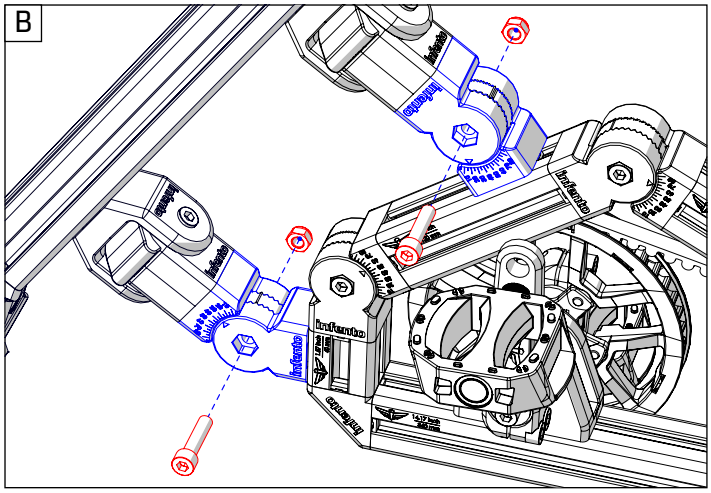

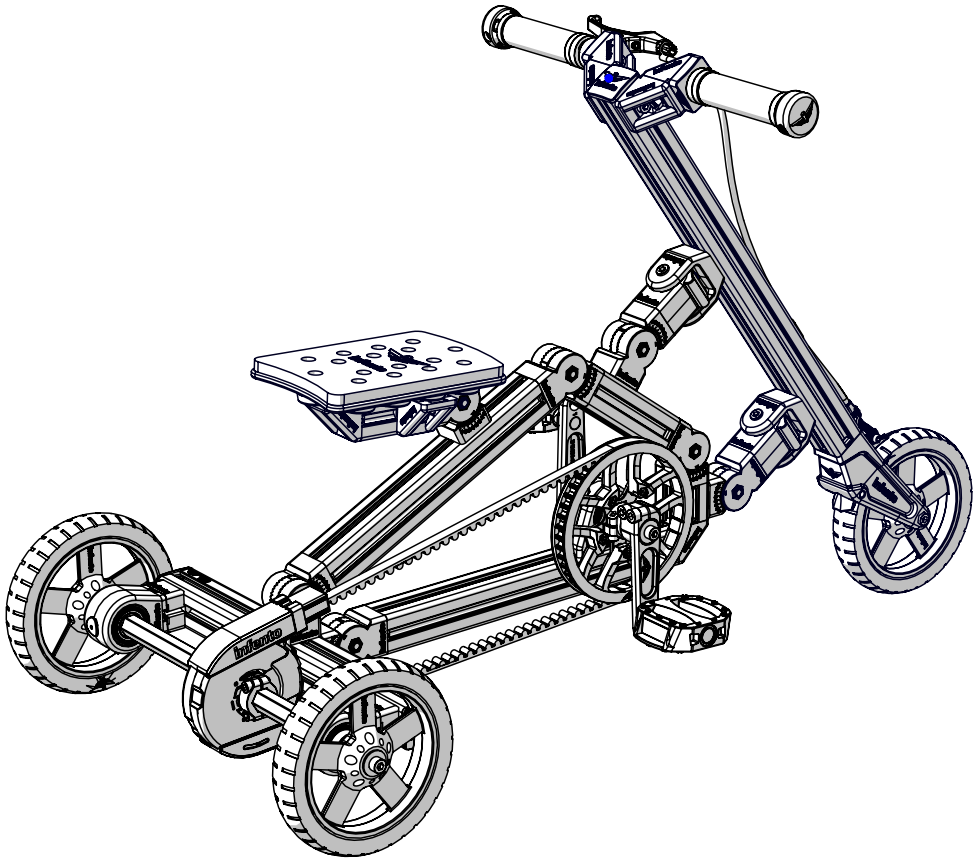

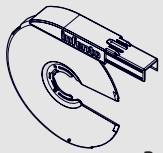

Belt shield cap 46T 2x

A

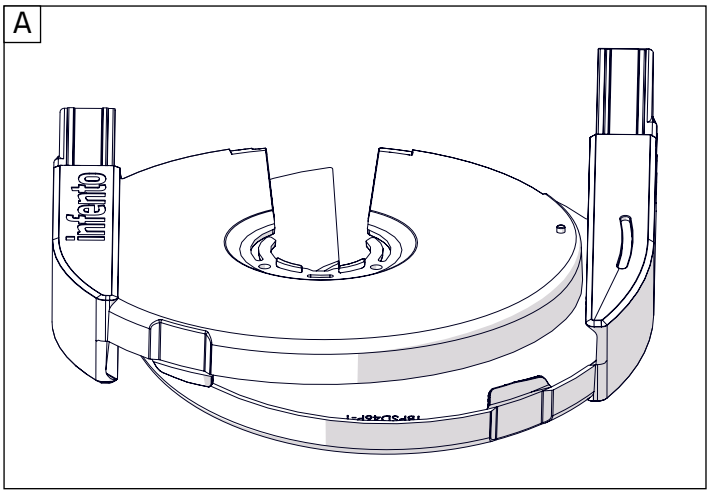

B

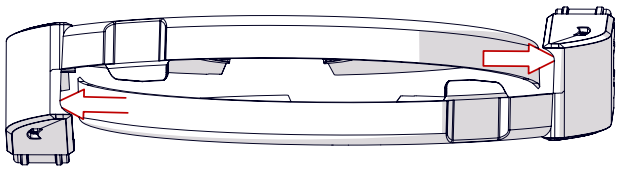

C

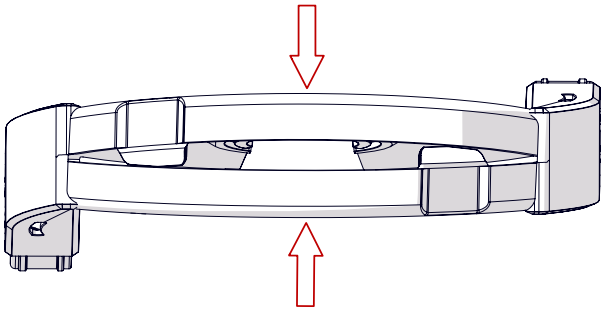

D

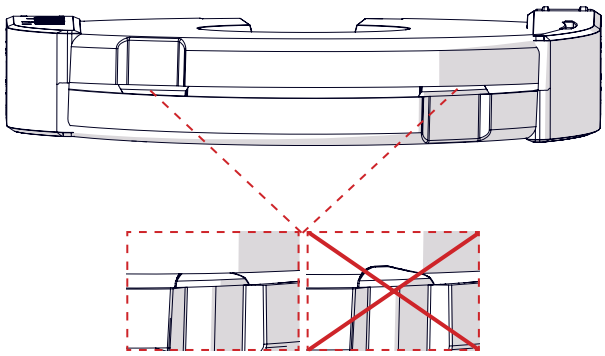

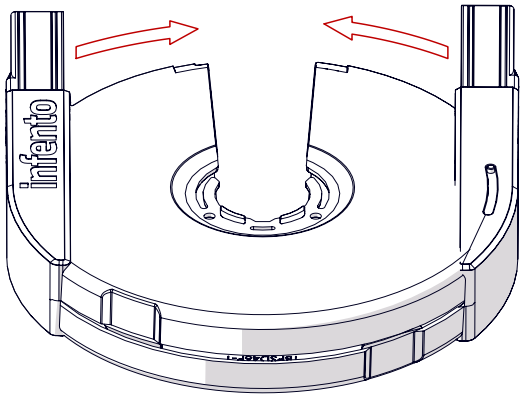

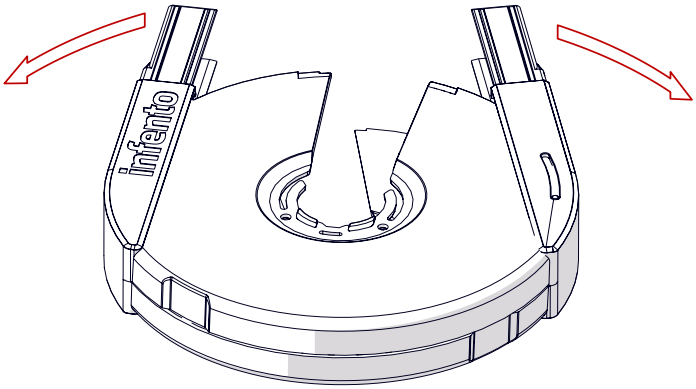

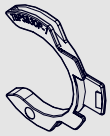

Belt shield nylon ring 2x

A

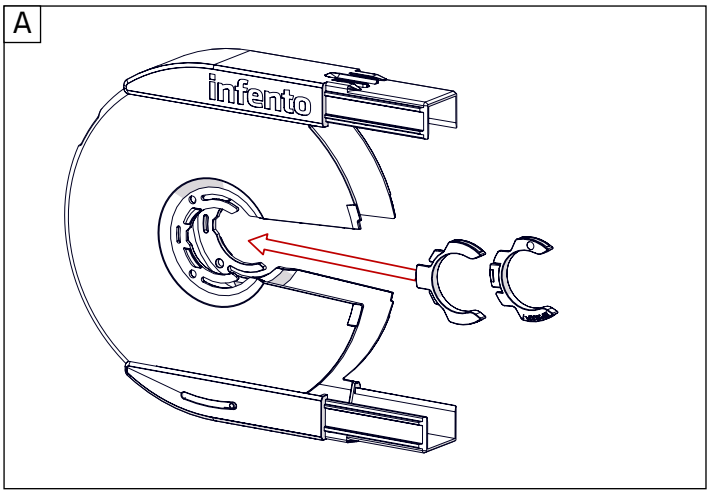

B

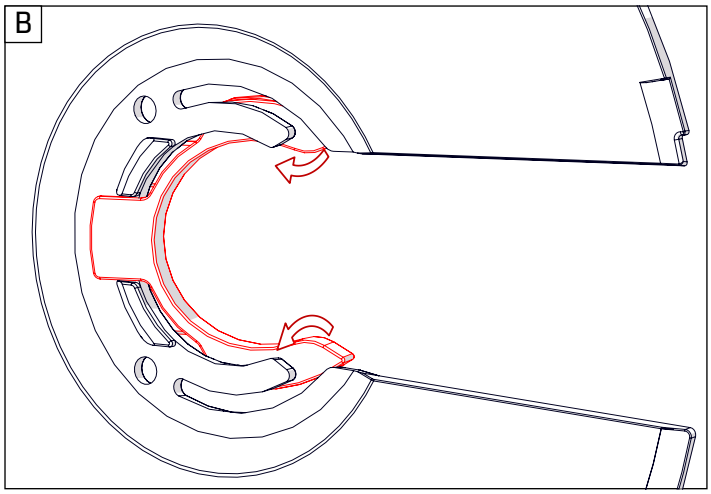

C

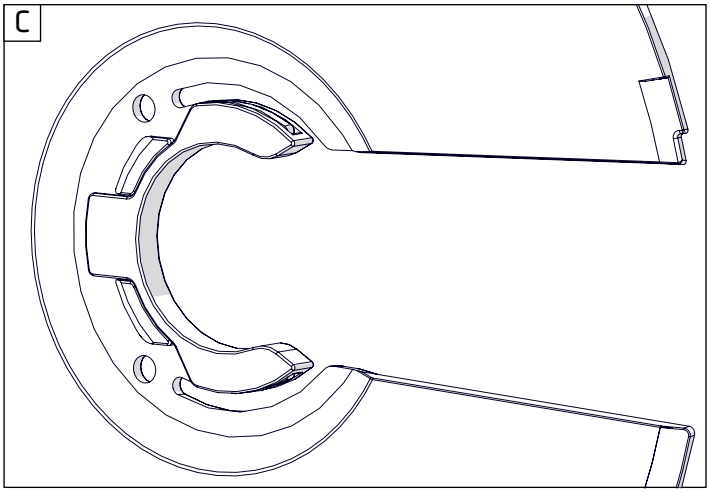

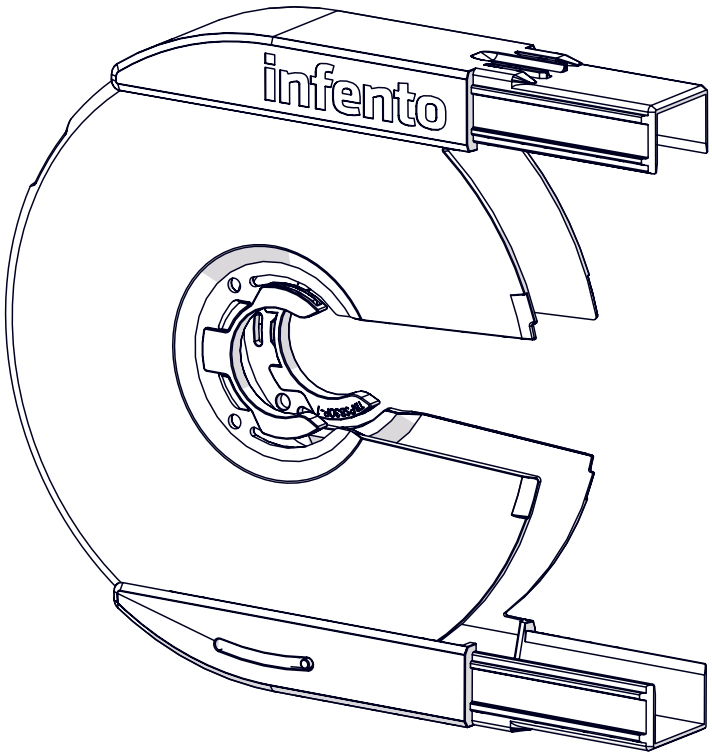

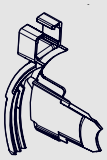

Belt shield centre 46T 2x

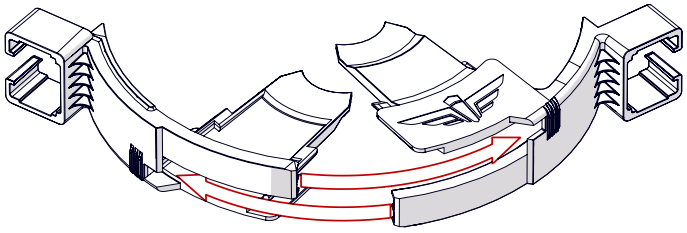

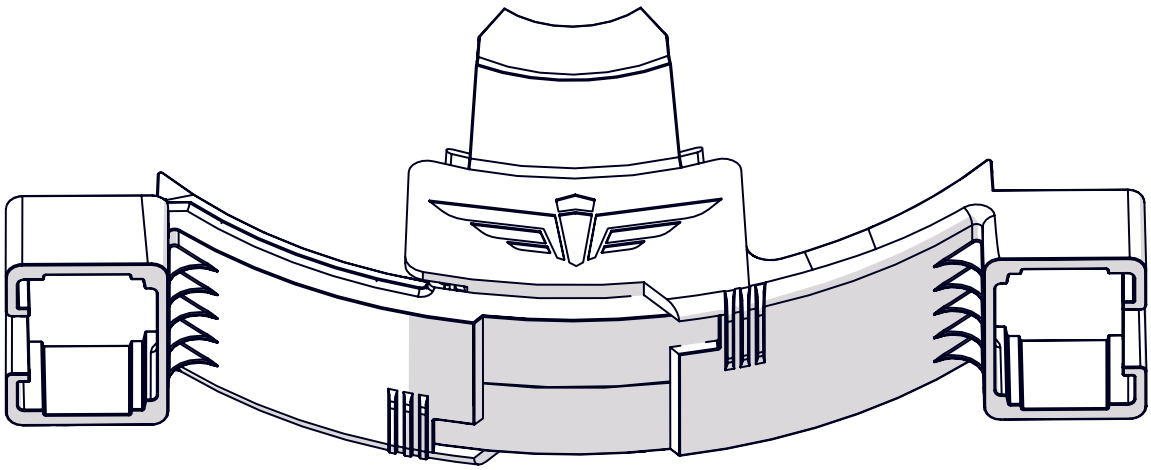

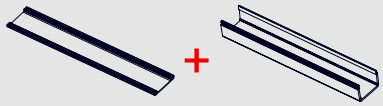

Belt shield profile top 2x
11.69 inch | 297 mm

Belt shield profile bottom 2x
11.69 inch | 297 mm

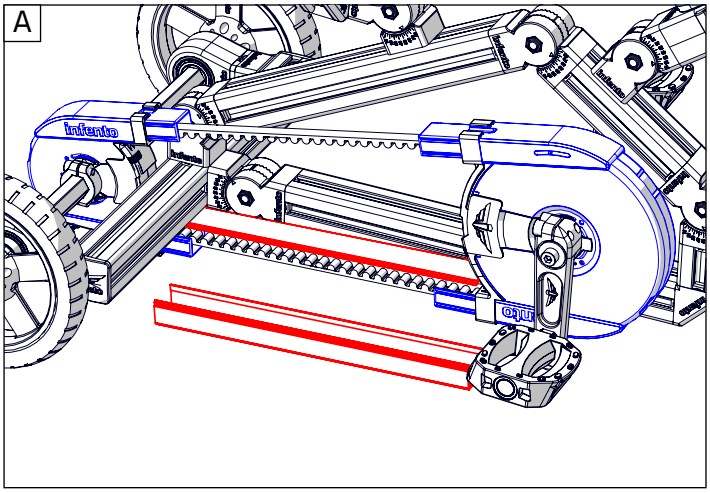

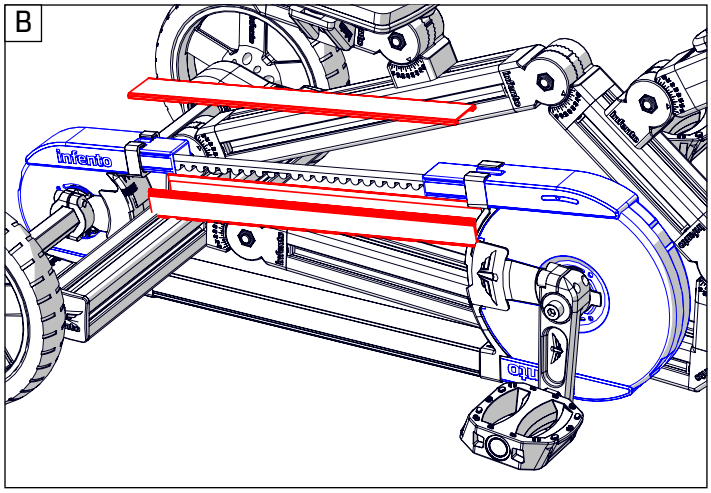

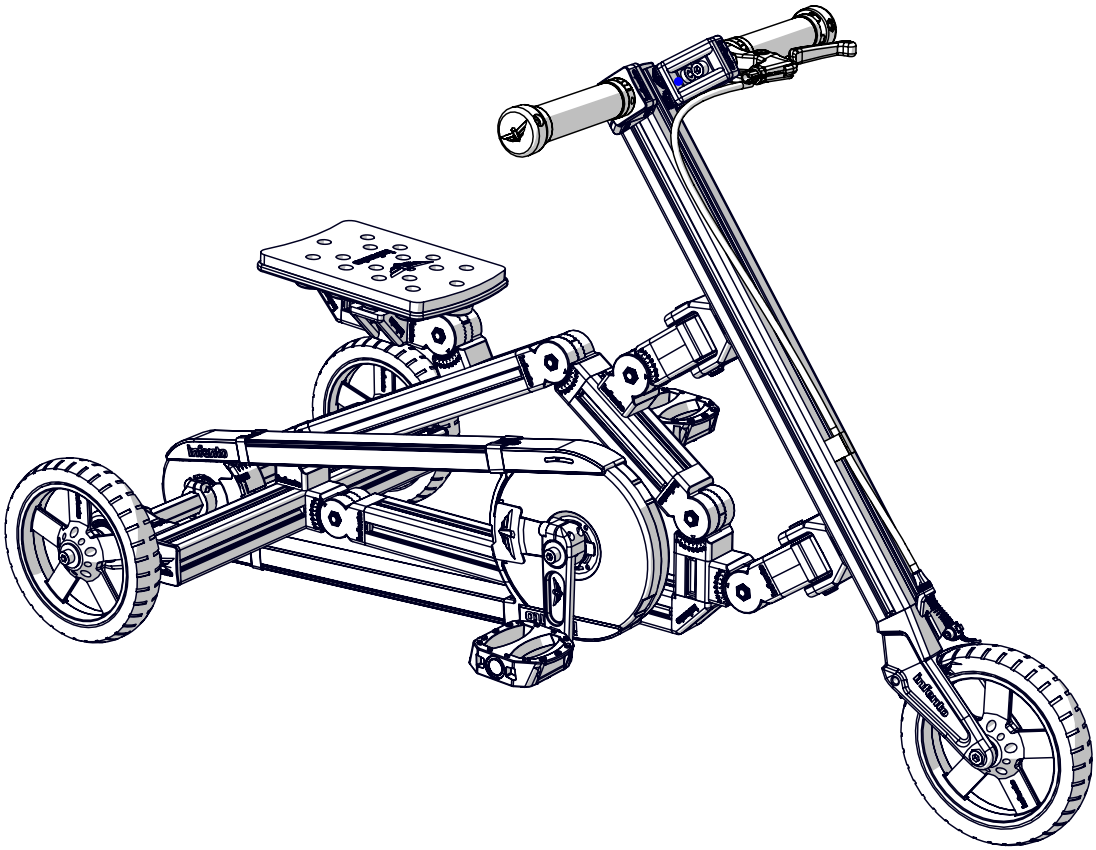

1x
Word mark

A

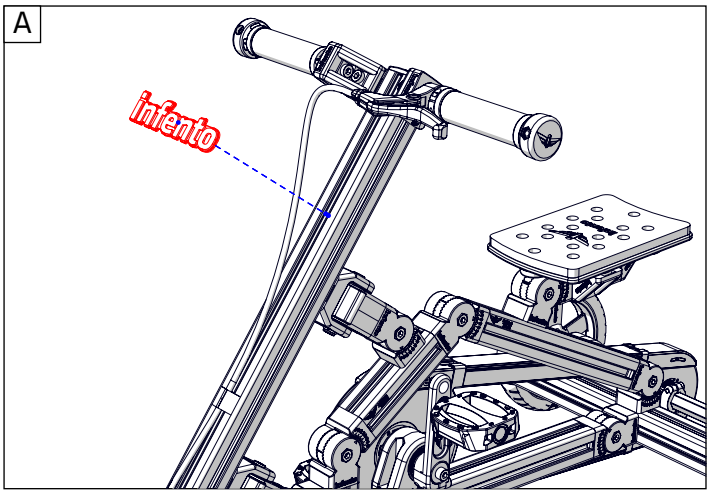

B

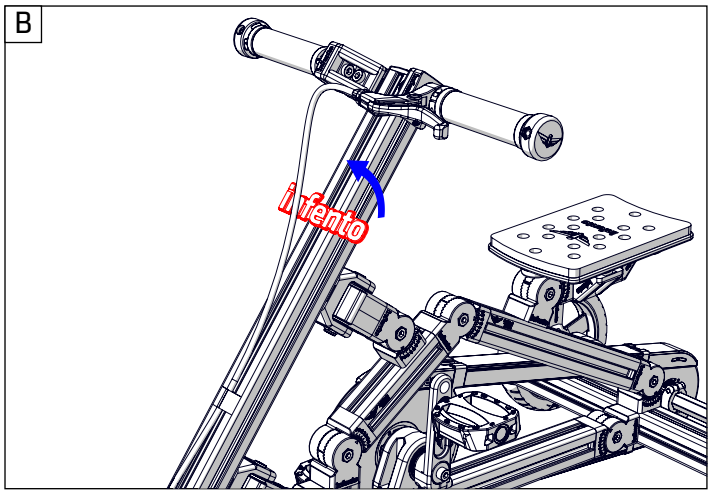

C

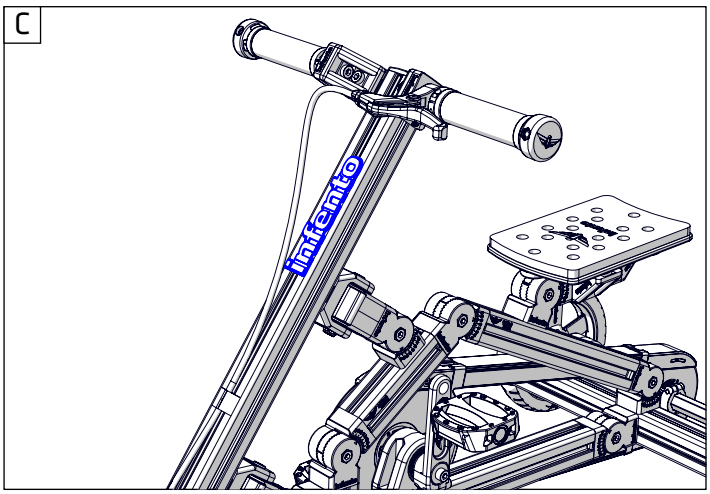

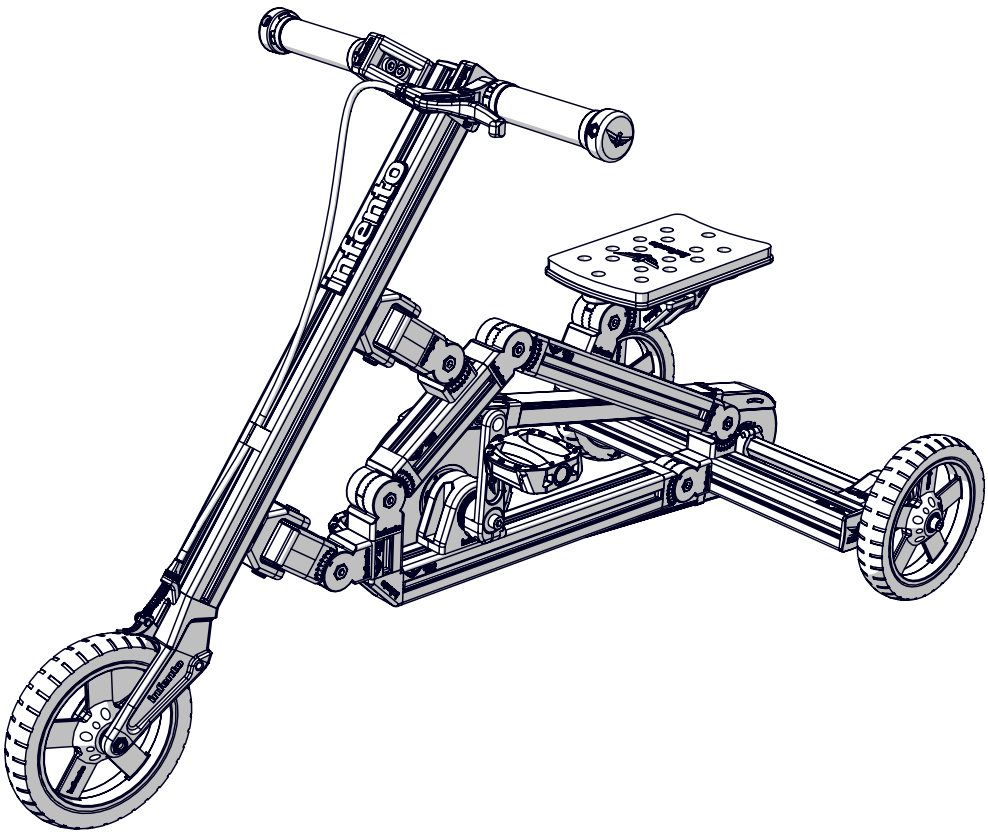

BOOSTER G2

THANK YOU FOR READING ME!